Specification Sheet

KADO

Kado Era Exposed Shower & Bath Set Cross Handles Brass Gold (3 Star)

9507558

SPECIFICATIONS	
Recommended Use	Domestic, Hotel & Commercial
Colour	Brass Gold
Finish	Polished
Material	DR Brass
Recommended Pressure Range	150 - 500 kPa
Maximum Continuous Working Temperature	80 deg C
Suitable for Storage Tank Hot Water	Yes
Suitable for Continuous Flow Hot Water	Yes
Suitable for Gravity Feed Hot Water	No
WARRANTY	
Warranty - Domestic Use	10 Years
Spare Parts & Labour	12 Months
Please refer to Warranty Page for full Terms and Conditions	

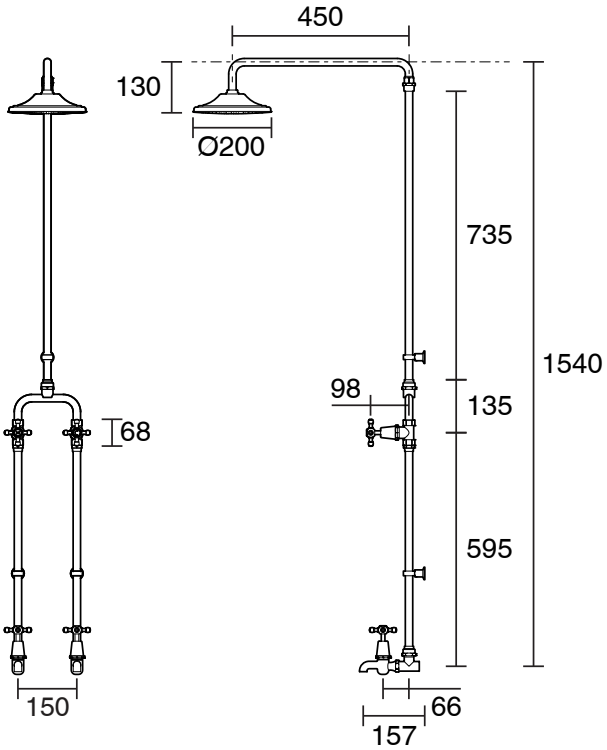

Dimensions are nominal measurements only.

CLEANING RECOMMENDATIONS:
We recommend the use of soapy water or approved cleaners. This product should not be cleaned with abrasive materials. Damage caused by any improper treatment is not covered by the product warranty. Refer to Warranty Conditions

WaterMark
AS/NZS 3718
WM-022867

Disclaimer: Products in this specification manual must by regulation be installed by licensed and registered trade people. The manufacturer/distributor reserves the right to vary specifications or delete models from their range without prior notification. Dimensions are nominal measurements only. Dimensions and set-outs listed are correct at time of publication however the manufacturer/distributor takes no responsibility for printing errors.

Published 12/10/2023

To see the complete Kado range go to
www.reece.com.au

reece