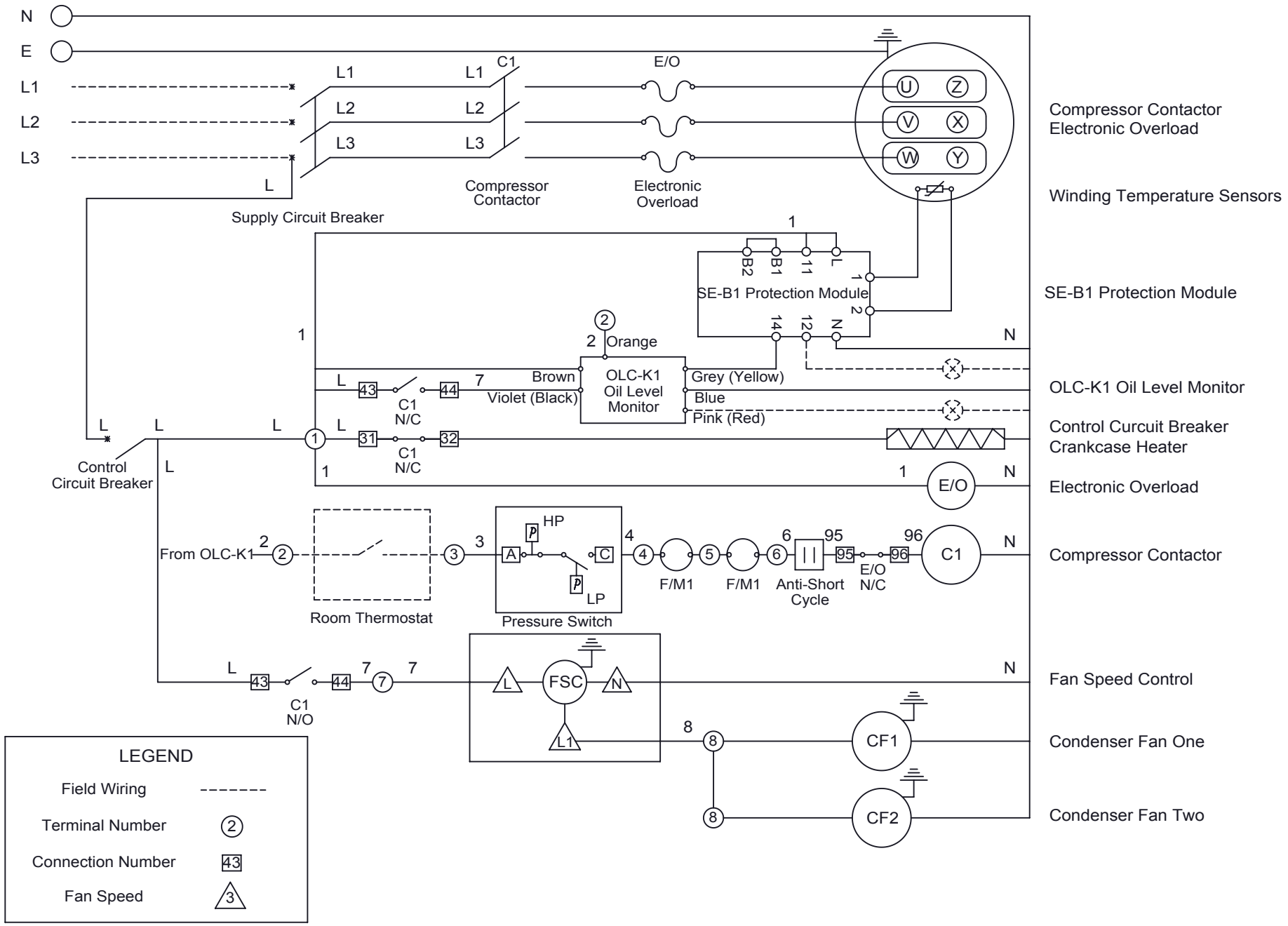

WARNING

THE ELECTRICAL CONNECTION OF THIS UNIT MUST BE PERFORMED BY QUALIFIED PERSONNEL AND MUST COMPLY WITH LOCAL ELECTRICAL STANDARDS

ACPAC Bitzer Octagon C4			Distributed by ACTROL Your best solution...
Drawn By	Checked by : R. Stringer	7684164 Index B	Last Update 14 June 2017