Geberit Sovent

GEBERIT

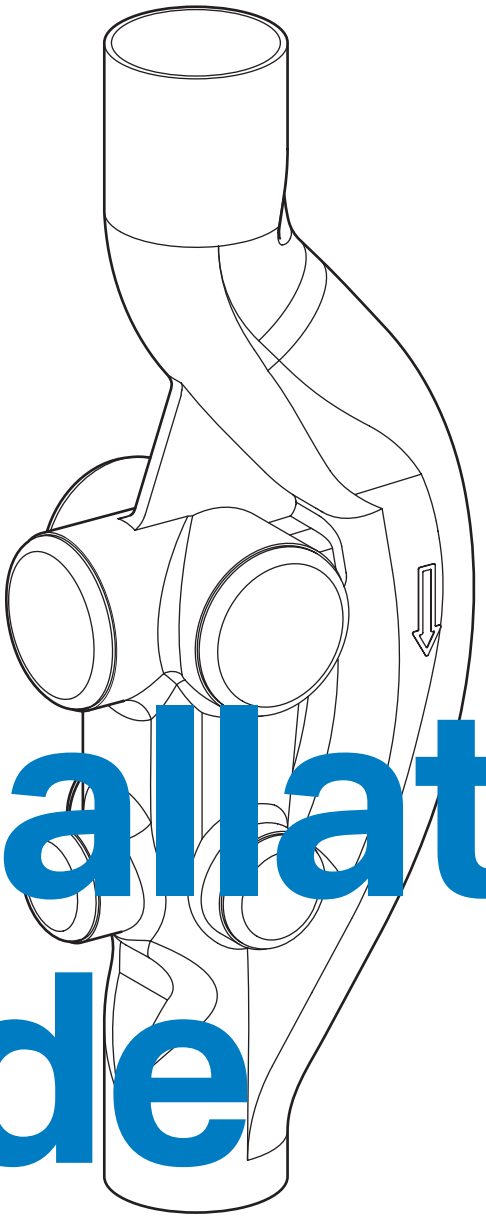

Installation Guide

Drainage for multi-storey building
Valid from 1 August 2014

KNOW
HOW
INSTALLED

Legal Information

System design / dimension data

This document contains only general, technical information. The design of the Geberit Sovent stack, especially the dimensions, must be drawn up and calculated separately for each specific individual application.

Disclaimer

All information contained in this document, which is based on or which refers to standards, ordinances or regulations etc., has been thoroughly researched and compiled with the greatest possible care. However, we cannot guarantee that such information is correct, complete or up to date.

Further product information

Further product information is available at www.geberit.com.au

Copyright

1 Introduction

1.1 Some background information

1.1.1 The Geberit Sovent history

Geberit Sovent, a single stack drainage system, was developed in 1959 by Fritz Sommer, a renowned vocational school director in Bern, Switzerland. The aim of the development was to substantially increase the performance of a soil and waste drainage system, and thus to eliminate a separate vent stack and reduce the diameter of the stacks in high-rise buildings. The specially designed branch inlet fitting, which is covered by worldwide patents, reduces the pneumatic pressure fluctuations in stacks preventing the syphonage of traps.

To prove the virtues of the Geberit Sovent stack, a 10-storey hydraulic test tower was built in Bern, Switzerland. During the sixties and seventies, the system was furthermore thoroughly tested in multi-storey privately and governmentally owned test installations set up in New York, Tokyo, Paris and Stockholm, and has received wide design code recognition.

This versatile drainage system with the engineered design offers an economical and high-performance alternative to conventional drainage systems.

1.1.2 Know-How Installed

Since Geberit's founding in 1874, the name has been synonymous with quality, ease of installation and technical knowledge.

This is no surprise. By applying our knowledge to find ways to make improvements, Geberit creates innovations that optimize synergy and performance throughout the entire system. The result is fast- and easy-to-install, highly reliable, integrated systems that set the standard for the sanitary industry.

1.1.3 Technical support

Our sales force, technical advisors and service personnel will be pleased to offer support and answer any of your questions.

Please contact us on 1800 GEBERIT or go to our website www.geberit.com.au.

1.1.4 Standards and approvals

Over the last four decades, this innovative system has been installed in thousands of high-rise residential, office and hotel buildings all over the world.

The Geberit Sovent fitting is a special fitting; it is based on the standards DIN EN 12056-2 and DIN EN 1519. It is covered under AS 3500.2:2003, section 9A and also has WaterMark approval - Level 1 - CofC 40004.

WaterMark®

The following installation instructions have been tested and proven by Geberit and are recommended for optimum system performance. Where applicable, refer to AS3500 and local regulations.

1.2 Fields of application

1.2.1 Where Geberit Sovent is best used

Due to its high capacity and excellent performance Geberit Sovent is an ideal drainage system for:
- High-rise office buildings
- Hotels
- Multy-storey residential buildings

1.2.2 For how many storeys is Geberit Sovent best used?

The Geberit Sovent stack becomes extremely cost-effective in buildings higher than 5 storeys.

1.2.3 Features and benefits

Why is Geberit Sovent a better solution? There is a simple answer to that:
- Better performance, less space, labour and material cost

Better performance. In comparison with conventional systems, Geberit Sovent:
- Reduces the pneumatic and hydraulic pressure
- Offers versatile branch joining possibilities
- Reduces stack sizes with the same loading capacities as a secondary ventilated system
- Saves space

Cheaper than a conventional solution. With regard to costs, Geberit Sovent has even more advantages:
- It simplifies the design of domestic waste water stacks
- It offers up to 6 connections on one multiple branch fitting
- Saves space, material and installation time
- No separate ventilation pipes are required

Two dimensions for all requirements. The fittings are available in the most common stack sizes of 110 and 160 mm in diameter.

No maintenance required. As with any other system using Geberit high-density polyethylene (HDPE) pipes and fittings, no maintenance is required.

Service life like other fittings. As the Geberit Sovent fitting is also made of high-density polyethylene, it has the same service life as other HDPE fittings.

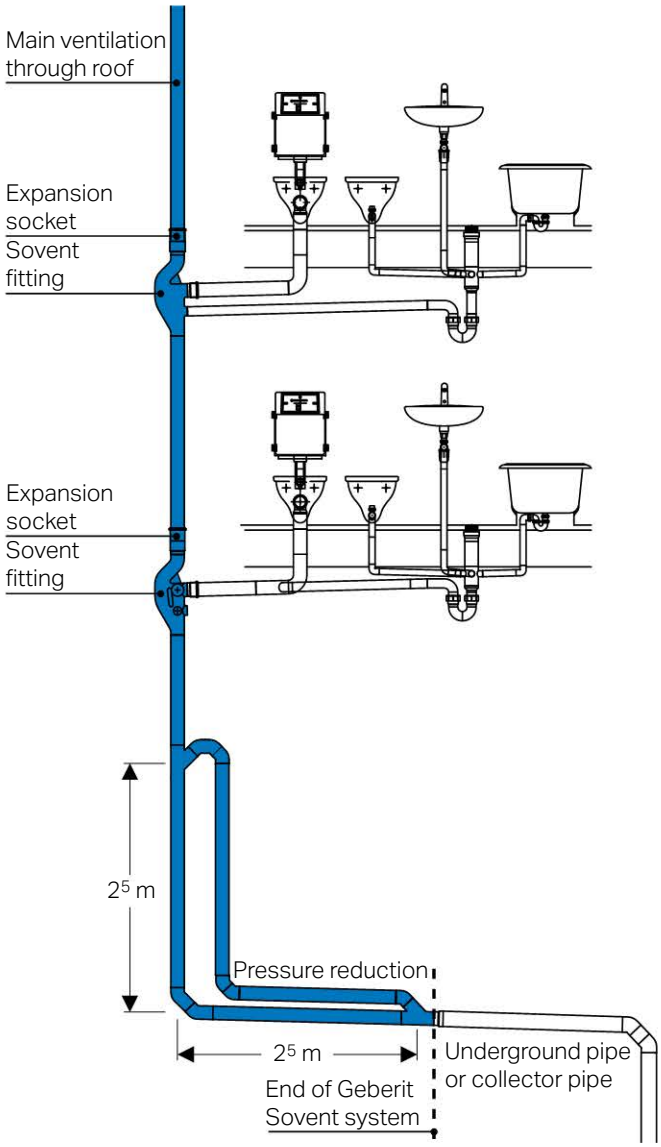

Figure 1: Geberit Sovent system

2 Product data

2.1 Function

Hydraulic and pneumatic balancing of a stack system is a very complex matter. Each stack design has its own characteristics. The capacity of the stack and vent system is influenced by the flow rate of the appliances, their simultaneous discharge pattern, and the branch inlet configuration and building drain design. To secure the water seal in the traps, the positive and negative pressures in a drainage system have to be limited.

2.1.1 Geberit Sovent fitting d110 and d160

How does a system with Geberit Sovent work? With the Geberit Sovent fitting, venting can be managed easily by using one fitting on each floor level. An additional ventilation pipe is not necessary.

Function of the opening to the stack. The opening to the stack is one of the key characteristics of the fitting. It allows the branches to be ventilated. Together with the free air circulation in the stack, the opening smoothes the water flow in the connected branches.

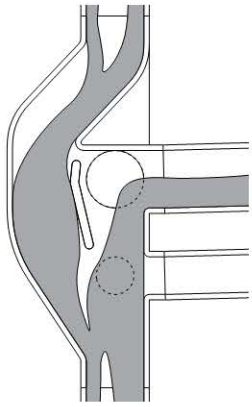

Figure 2: Geberit Sovent d110

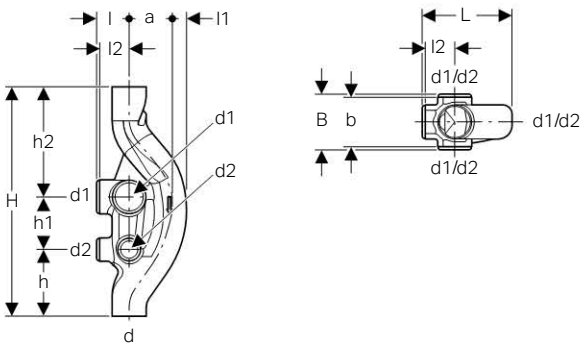

Geberit code	Reece code	dØ mm	d1Ø mm	d2Ø mm	a cm	B cm	b cm	H cm	h cm	h1 cm	h2 cm	L cm	l cm	l1 cm	l2 cm	Colour
367.614.16.1	1430112	110	110	75	13	18	8	74	21,5	17	35,5	29	10,5	5,5	9,5	black

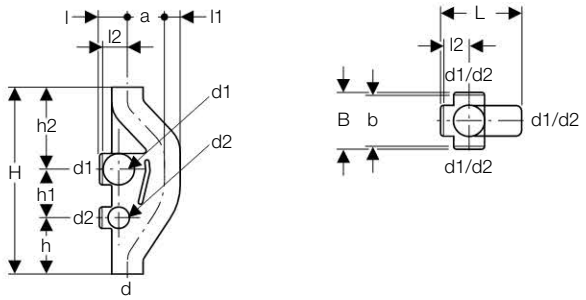

Figure 3: Geberit Sovent d160

Geberit code	Reece code	dØ mm	d1Ø mm	d2Ø mm	a cm	B cm	b cm	H cm	h cm	h1 cm	h2 cm	L cm	l cm	l1 cm	l2 cm	Colour
369.001.16.1	1433739	160	110	75	13,3	23	9,5	71	19	17	35	34,3	13	8	11	black

2.1.2 Geberit Sovent fitting d110

Another distinguishing feature of the Geberit Sovent fitting d110 is its patented, flow-optimised design. The flow divider directs the water and promotes functional stability in the system.

The swirl generates rotation, allowing the flow to move along the wall of the pipe and thus creating a continuous air column. This increases discharge capacity by 30 % (the Geberit Sovent fittings d110 delivers 12.0 l/s compared to other brands that do 8.7 l/s or less).

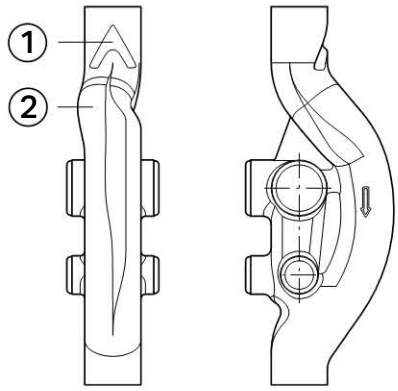

1 Flow divider
2 Swirl

Maximum velocity of fall. Terminal velocity of 13 m/s is reached after falling 35 m due to friction losses and air resistance within the stack.

The Geberit Sovent fitting itself works as a speed breaker on every floor where it is connected.

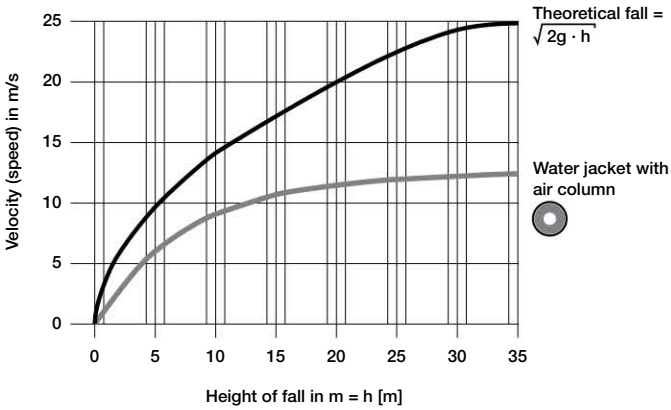

3 Planning

3.1 Planning requirements

3.1.1 Which points have to be observed?

When a Geberit Sovent stack is planned, the following points have to be observed in addition to the general rules for waste and drainage stack design:

- Use of a Geberit Sovent fitting instead of a common branch fitting
- Pressure relief ventilation at the base of the stack
- Every stack has to be ventilated through the roof with the same diameter as the stack.

3.1.2 Planning of branch discharge pipes per floor

The branches have to be designed in accordance with AS 3500.2:2003, which include the dimensioning diameter and the maximum length of the branch. It is permitted to use all 6 connection possibilities simultaneously.

Opposed connections to Sovent fittings may be used only where the opposing pipes are connected to equal numbers of the same type of fixtures as per AS 3500.2:2003.

3.1.3 Configuration of branch discharge pipes

The branch discharge pipes must be configured in accordance with AS 3500.2:2003. These prescribe the diameter as well as the maximum length of the branch discharge pipe. Refer to page 19 for conversion of discharge units to fixture unit ratings.

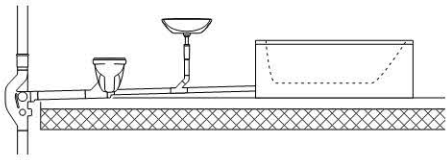

max. permitted numbers DU	largest single DU	dø	Geberit OD [mm]
3.0 [1]	1.5	70	75
6.5 [2]	2.0	90	90
15.0	2.5	100	110

[1] Maximum 1 fixture at 1.5 DU

[2] Maximum 2 WC at 2.0 DU (6 liter flush)

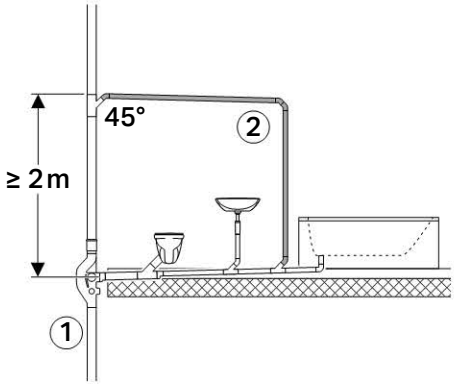

Image not to scale

max. permitted numbers DU	largest single DU	Branch vent pipe	dø	Geberit OD [mm]
2.0	0.5	56	56	56
3.0 [1]	1.0	56	60	63
4.5	1.5	56	70	75
9.0 [2]	2.0	56	90	90
25.0	2.5	56 [3]	100	110

[1] Maximum 2 fixtures at 0.8 DU

[2] Maximum 2 WC at 2.0 DU (6 liter flush)

[3] Up to 25 DU if the diameter of the branch vent pipe is 56 (If DU > 25 the branch vent pipe diameter is 63)

3.1.4 Maximum flow rate per Geberit Sovent stack

The maximum permissible simultaneous flow per Geberit Sovent stack d110 is 12.0 l/s, for d160 it is 17.0 l/s. The pipe dimension of the stack, with main ventilation through the roof, must be configured in the d110 mm or d160 mm throughout.

This corresponds to over 140 standard type apartments for Geberit Sovent 110 or 280 standard type apartments for Geberit Sovent 160 per stack (for standard apartment size an estimate of 4.1 DU per floor is used).

Fitting	Maximum load with waste water	Dimension of stack with main ventilation throught roof
Sovent d110	12.0 l/s	ø 110 mm
Sovent d160	17.0 l/s	ø 160 mm

3.1.5 Installation per floor

A Geberit Sovent fitting must be planned in every floor where there are connections to the discharge stack. The maximum distance between two Geberit Sovent fittings shall not exceed 5 m.

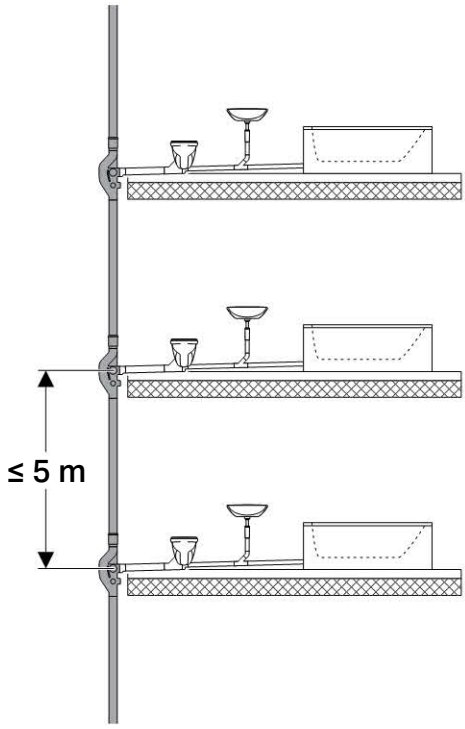

If the maximum distance cannot be maintained for technical reasons, two offsets with two 45° bends each can be installed in the discharge stack instead of a Geberit Sovent fitting.

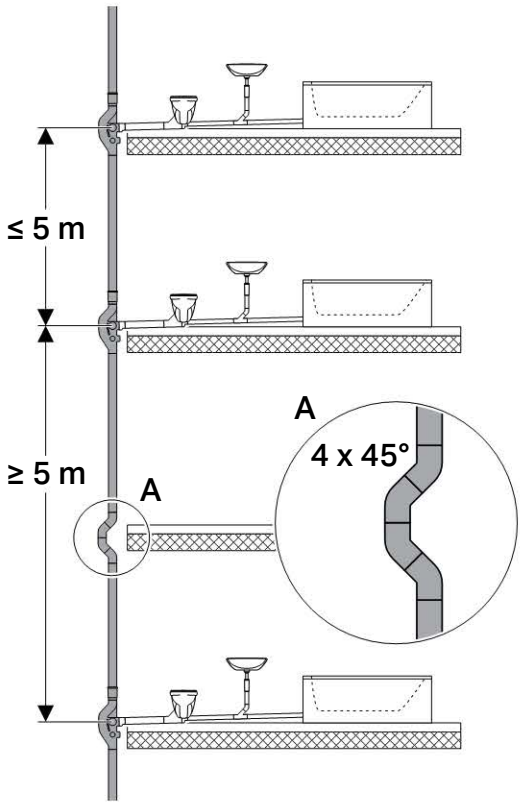

This combination of two offsets with two 45° bends is only allowed when no appliances are connected on the corresponding floor.

3.1.6 Planning of further stacks

If the waste water load of the stack d110 is greater than 12.0 l/s (DU > 576), the following measures must be planned:

- Use further stacks and distribute the connections accordingly (see illustration A and B)
- Or use a stack d160, maximum 17.0 l/s (see illustration C)

If the waste water load of the stack d160 is greater than 17.0 l/s (DU > 1156), segmentation is required. The total load has to be distributed to different Geberit Sovent stacks (see dimension 110).

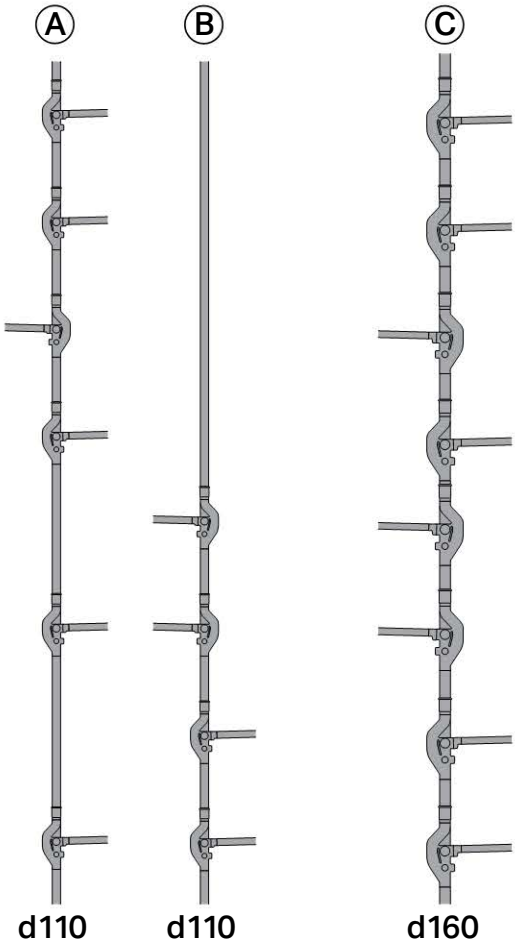

3.1.7 Determination of the waste water figures

One of the first steps when planning a Geberit Sovent stack is to determine the amount of waste water.

For this, all DU's of the appliances have to be taken into account and included in the equation for the Geberit Sovent stack (see chapter 4 "Dimensioning").

3.1.8 Connection of the branch ventilation

The maximum length of a branch discharge pipe without ventilation is 10 m. If a ventilation pipe is necessary according to these regulations, the pipe is connected to the Geberit Sovent stack.

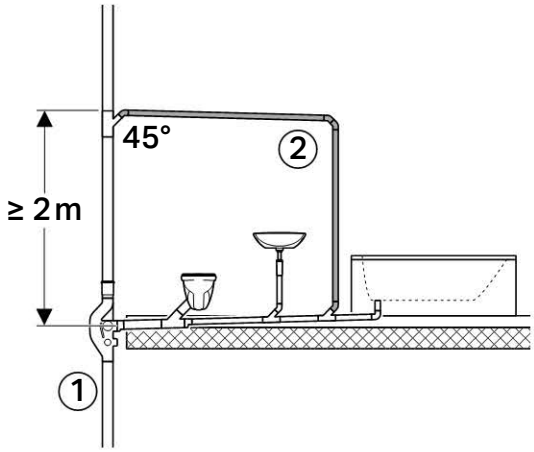

1 Planning of a discharge stack according to Geberit Sovent rules
2 Planning of branch discharge and branch ventilation pipes according to AS 3500.2:2003

Image not to scale

3.1.9 End of the Geberit Sovent stack

A pressure relief line d110 mm must be fitted at the base of each Geberit Sovent stack (regardless if dimension 110 mm/160 mm) for reducing any pressure build-up that might occur.

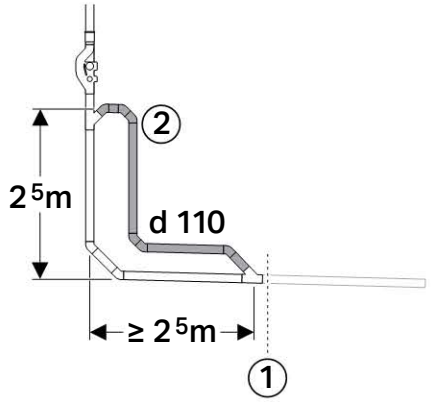

1 End of the Geberit Sovent stack
2 Pressure relief line for pressure relief

3.1.10 Connection at the base of the stack

Zones without connections must be planned before and after the direction change into the underground pipe or collector pipe.

Sometimes appliances must be connected which are rather close to the base of the stack, for example on the first floor. Domestic sanitary appliances are connected to the pressure relief line at the base of the stack (either above or below of a floor) in order to prevent backing up.

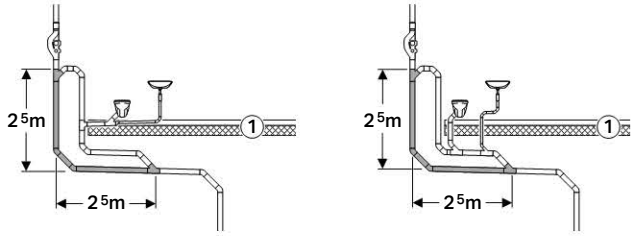

1 First floor

Connection to the bypass is allowable in some circumstances. For further information, contact a Geberit representative.

3.1.11 Joining of stack pipes

If Geberit Sovent stacks are joined together, the resulting drainage pipe is calculated as a collector pipe (see chapter 4 "Dimensioning").

3.1.12 Vertical to horizontal transition of the stack

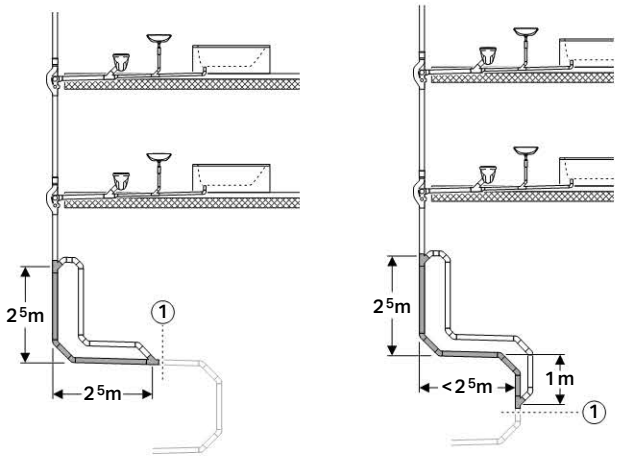

1 End of the Geberit Sovent stack; planning of the subsequent pipe layout in accordance with AS 3500.2:2003

3.1.13 Stack with offset

The building design may require a vertical offset of the Geberit Sovent stack. Generally this is possible up to an offset of 1 m at max. 45° deflection. If the offset is larger, a normal vertical to horizontal transition with pressure relief line must be planned.

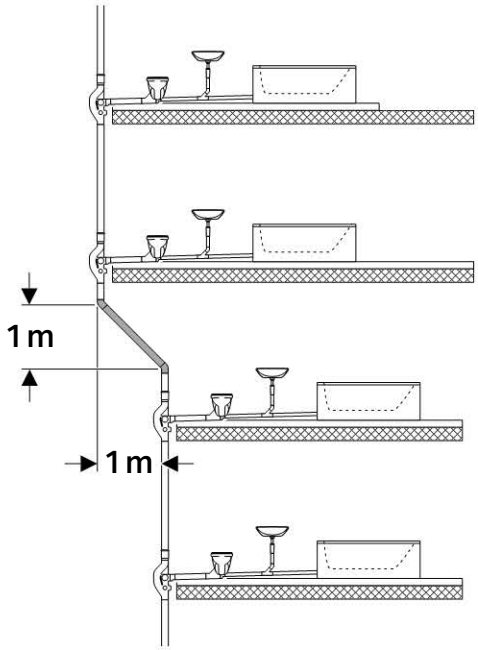

3.1.14 Additional connections to the Geberit Sovent stack

Connections to a stack are made with a Geberit Sovent fitting. As an exception, however, pipes with condensation or dripping water can be connected to the stack between two Geberit Sovent fittings when the following conditions are met:

- The maximum dimension of the branch discharge pipe is ø 63 mm
- The connection is made exclusively using an 88.5° branch fitting

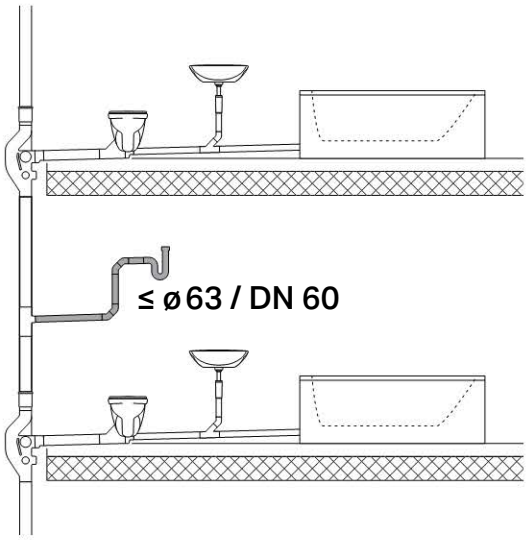

3.1.15 Mixed installation of Geberit Sovent d110 and d160

Mixed installations of Geberit Sovent fittings ø 110 and ø 160 in the same discharge stack are not allowed.

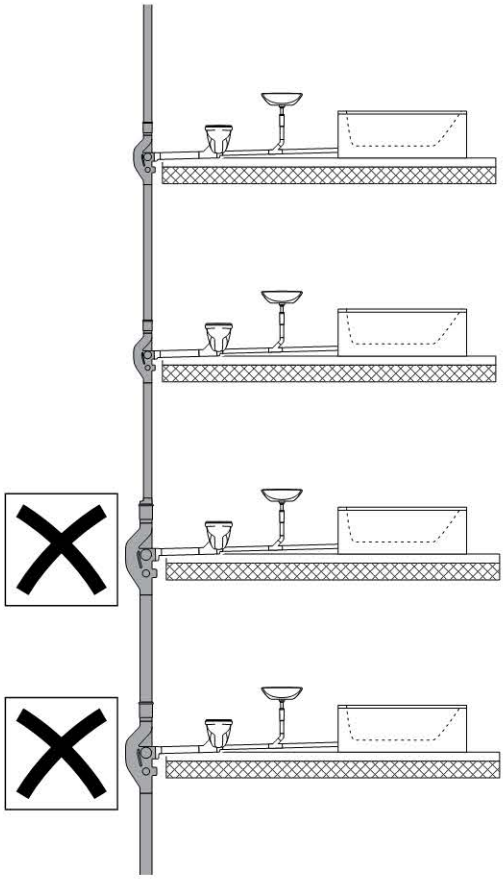

3.1.16 Underground pipe and collector pipe dimension

Dimensioning of the underground pipe/collector pipe also follows AS 3500.2:2003 regulations. See the section 4.2.3 "Sample calculation 3 for selecting the underground pipe or the collector pipe with a filling degree of 50 %" and 4.2.4 in the chapter 4 "Dimensioning" for information on how to evaluate a total drainage load.

3.1.17 Joining of ventilation pipes

Each Geberit Sovent discharge stack must be individually continued through the roof. Geberit does not recommend joining the stacks into one ventilation stack. If the building structure permits no other possibility than joining the ventilation, the collector pipe must be configured in accordance with AS 3500.2:2003.

If the corresponding information is missing, a ventilation collector pipe can be set up in accordance with the following rules:

- Combine a maximum of 3 Geberit Sovent stacks
- The size of the ventilation collector pipe must be increased in accordance with the following scheme for each additional stack connected

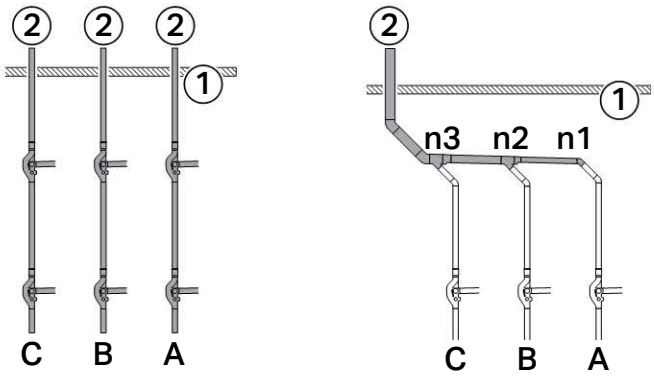

1 Building roof
2 Ventilation pipe or ventilation collector pipe

Fitting	Dimension n1	Dimension n2	Dimension n3
Sovent d100	ø 110 mm	ø 160 mm	ø 200 mm
Sovent d160	ø 116 mm	ø 200 mm	ø 250 mm

3.1.18 Geberit Sovent stack with air admittance valve

The use of air admittance valves in the Geberit Sovent stack is not permitted. Air admittance valves can have a negative effect on the discharge capacity of the Geberit Sovent discharge stack.

Is a deareator necessary? No special fitting is necessary. At the end of each Geberit Sovent stack, the pressure relief line prevents the build-up of air pressure (see chapter 3.1.9 "End of the Geberit Sovent stack").

4 Dimensioning

4.1 Calculation

4.1.1 Hydraulic calculation basis

Each appliance has a specified discharge unit, whereas one DU is equal to 1 l/s.

Fixture	Fixture abbreviations	Min. size of trap outlet and fixture discharge pipe DN		Fixture unit rating	DU
			NZ (only)		
Autopsy table	AT	50	–	3	1.0
Bain-marie	BM	40	–	1	0.5
Basin	B	40	32	1	0.5
Bath (with or without shower)	Bth.	40	–	4	0.8
Bath (foot)	Bath (foot)	4	–	3	0.8
Bath (baby)	Bath (baby)	40	–	3	0.8
Bath (shower)	Bath (shr)	40	–	4	0.8
Bedpan sterilizer	BPS	50	–	4	1.0
Bedpan washer	BPW	80	–	6 (F. valve) 4 (Cist)	2.0 2.0
Bedpan washer	BPW	100	–	6 (F. valve) 4 (Cist)	2.5 2.0
Bedpan washer/sterilizer	BPWS	80	–	6 (F. valve) 4 (Cist)	2.5 2.0
Bedpan washer/sterilizer	BPWS	100	–	6 (F. valve) 4 (Cist)	2.5 2.0
Bidet, bidette	Bid	40	32	1	0.5
Circular wash fountain	CWF	50	–	4	1.0
Clothes-washing machine– • domestic • commercial	CWM	40 50	–	5 ???	1.0 1.5
Dental unit	DU	40	–	1	0.5
Dishwashing machine– • domestic • commercial	DWM	40 50	–	3 ???	0.5 1.5
Drinking founting	DF	40	25	1	0.5
Floor waste gully– • without fixture • with fixture	FW	50	–	0 as per fixture rating	0
Glass-washing machine	GWM	40	–	3	1,0
Potato peeler	PP	50	–	3	1.0
Sanitary napkin disposal unit	SNDU	40	–	3	1.0
Shower– • single • multiple	Shr	40 50	–	2 2 per shower head	0.6 0.8
Sink– • single (with or without disposal unit)	S	50	40	3	0.8
• double (with or without disposal unit)	S	50	40	3	1.0
• tea	TS	50	40	1	0.5
• bar, domestic	BS(D)	40	–	1	0.5
• bar, commercial	BS(C)	50	–	3	1.0
Sink cleaner	CS	50	40	1	1.0

Fixture	Fixture abbreviations	Min. size of trap outlet and fixture discharge pipe DN		Fixture unit rating	DU
			NZ (only)		
Sink laboratory	LS	50	–	1	1.0
Sink (pot or utility)	PS	50	–	5	1.0
Slop hopper	SH	100	–	6 (F. valve) 4 (Cist)	2.5
Trough– • ablution • laundry (single or double)	 Tr.(A) Tr.(L)	 40 40	–	 3 5	 1.0 2.0
Urinal– • wall-hung (including waterless) • stall, or each 600 mm lenght of slab	Ur	40 50	32	1 1	0.5 0.8
Water closet pan	WC	80	–	6 (F. valve) 2 (Cist)	2.0 2.0
Water closet pan	WC	100	–	6 (F. valve) 4 (Cist)	2.5 2.0
Bathroom group in a single room (basin, bath, shower, water closet)	–	–	–	6	3.5
Combination pan room sink and flushing bowl	PRS	80	–	6 (F. valve) 4 (Cist)	2.5
Combination pan room sink and flushing bowl	PRS	100	–	6 (F. valve) 4 (Cist)	2.5

4.1.2 How is a Geberit Sovent stack calculated?

The key figure in a Geberit Sovent stack is the maximum flow rate of water permitted (Q_{max}) in the stack which is
For Geberit Sovent stack ø 110 mm = 12.0 l/s
For Geberit Sovent stack ø 160 mm = 17.0 l/s

The dimensions of the Geberit Sovent stack are selected according to the following formula:

$$Q_{max} = K \cdot \sqrt{\sum DU}$$

Q_{max} Maximum flow rate
(For Geberit Sovent stackø 110 mm / DN 100 = 12.0 l/s)
(For Geberit Sovent stack ø 116 mm / DN 100 = 17.0 l/s)
K Frequency factor
(Standard residential and offic buildings = 0.5)
DU Total of all discharge units

This makes for 12.0 l/s a total of about 576 DU's per stack.

This makes for 17.0 l/s a total of about 1150 DU's per stack.

4.1.3 Simultaneous use of appliances

The frequency factor K of 0.5 represents the simultaneous use of appliances connected to one stack. This means that not all branches (apartments) are discharging water to the stack at the same time. For other frequency factors see chapter 6 "Annex".

4.2 Calculation examples

4.2.1 Calculation example 1

Starting position:
- Residential building with 40 floors
- 2 apartments per floor

Calculation of the discharge unit rating (DU):

Waste water flow rate of the building:

Number	Drainage component	DU
1	Kitchen sink	0.8
1	Bathtub	0.8
2	Washbasin	1.0
1	Toilet, 6 l	2.0
	Total per apartment	4.6
	Total per floor	9.2
	Total for building	**368**

Calculation of the waste water load

$$Q_S = K \cdot \sqrt{\sum DU}$$
$$= 0{,}5 \cdot \sqrt{368}$$
$$= \mathbf{9{,}59\ l/s}$$

Result
- Q_S (9.59 l/s) is less than Q_{max} of 12 l/s the maximum flow rate per Geberit Sovent stack ø 110)
- **One** Geberit Sovent stack **ø 110 mm** is sufficient for draining this building

4.2.2 Calculation example 2

Starting position:
- Residential building with 120 floors
- 2 apartments per floor

Calculation of the discharge unit rating (DU):

Waste water flow rate of the building:

Number	Drainage component	DU
1	Kitchen sink	0.8
1	Bathtub	0.8
2	Washbasin at 0.5 DU	1.0
1	WC system, 6 l	2.0
	Total per apartment	4.6
	Total per floor	9.2
	Total for residential building	1104.0

Calculation of the waste water load

$$Q_S = K \cdot \sqrt{\sum DU}$$
$$= 0{,}5 \cdot \sqrt{1104}$$
$$= \mathbf{16{,}6\ l/s}$$

Result
- Q_S (16.6 l/s) is greater than Q_{max} of 12.0 l/s the maximum flow rate per Geberit Sovent stack ø 110
- Q_S (16.6 l/s) is less than Qmax of 17.0 l/s the maximum flow rate per Geberit Sovent stack ø 160
- This building must be drained with **two** Geberit Sovent stacks **ø 110 mm** or **one** Geberit Sovent stack **ø 160 mm**

4.2.3 Sample calculation 3 for selecting the underground pipe or the collector pipe with a filling degree of 50 %

A high-rise building is usually equipped with several stacks, which are then combined into a collector pipe. The dimension of this pipe is calculated in the following way.

Starting position:

- Building with three Geberit Sovent stacks ø 110 mm (DN 100)
- Different waste water flow rate per stack
- **Filling degree** of the underground pipe or collector pipe – **50 %**

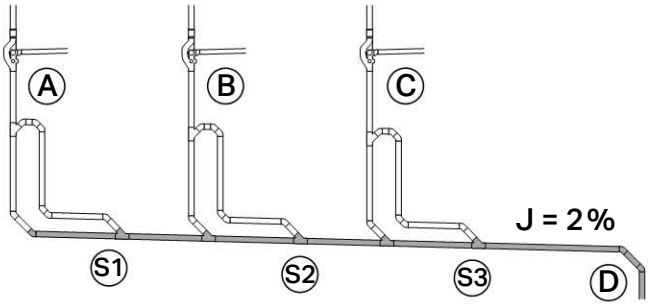

A Stack A, $\Sigma DU_A = 180$
B Stack B, $\Sigma DU_B = 150$
C Stack C, $\Sigma DU_C = 110$
D Collector pipe
S1 Section 1
S2 Section 2
S3 Section 3
J Slope

Calculation of the waste water flow rate for the individual sections

Section 1 $= K \cdot \sqrt{\Sigma DU_A}$
$= 0.5 \cdot \sqrt{180}$ = **6.7 l/s**

Section 2 $= K \cdot \sqrt{\Sigma DU_A + \Sigma DU_B}$
$= 0.5 \cdot \sqrt{330}$ = **9.1 l/s**

Section 3 $= K \cdot \sqrt{\Sigma DU_A + \Sigma DU_B + \Sigma DU_C}$
$= 0.5 \cdot \sqrt{440}$ = **10.5 l/s**

Calculation of the pipe dimensions for sections 1–3

Table 1: Maximum flow rate for underground pipes or collector pipes at a filling degree of **50 %** in accordance with EN 12056-2

Slope J								
1 % (1:100)	1.5 % (1:66)	2 % (1:50)	2.5 % (1:40)	3 % (1:33)	3.5 % (1:28)	4 % (1:25)	5 % (1:20)	Pipe dimension ø [mm]
2.5	3.1	3.5	4.0	4.4	4.7	5.0	5.6	110
4.1	5.0	5.7	6.4	7.1	7.6	8.2	9.1	125
7.7	9.4	10.9	12.2	13.3	14.4	15.4	17.2	160
14.2	17.4	20.1	22.5	24.7	26.6	28.5	31.9	200
26.9	32.9	38.1	42.6	46.7	50.4	53.9	60.3	250
48.3	59.2	68.4	76.6	83.9	90.7	96.6	108.4	315 / 300

Reading example:

- calculated waste water flow rate: 6.7, 9.1, 10.5 l/s
- pipe slope: 2 %
- table, column 2 % incline: all values between 5.7 and 10.9 l/s
- table, line 10.9 l/s: pipe dimension for entire pipeline ø 160 mm

4.2.4 Sample calculation 4 for selecting the underground pipe or the collector pipe with a filling degree of 50 %

Starting position:

- Building with three Geberit Sovent stacks ø 160 mm (DN 150)
- Different waste water flow rate per stack
- **Filling degree** of the underground pipe or collector pipe – **50 %**

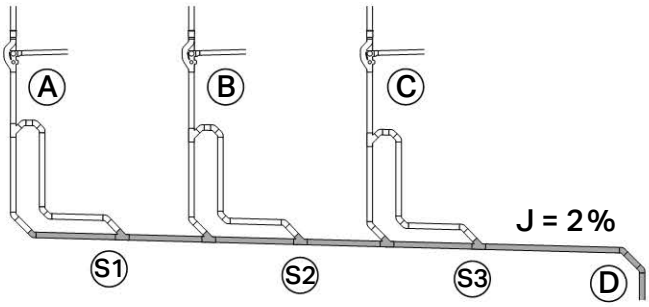

A Stack A, $\Sigma DU_A = 800$
B Stack B, $\Sigma DU_B = 750$
C Stack C, $\Sigma DU_C = 820$
D Collector pipe
S1 Section 1
S2 Section 2
S3 Section 3
J Slope

Calculation of the waste water flow rate for the individual sections

Section 1 $= K \cdot \sqrt{\Sigma DU_A}$

$= 0.5 \cdot \sqrt{800}$ = **14.1 l/s**

Section 2 $= K \cdot \sqrt{\Sigma DU_A + \Sigma DU_B}$

$= 0.5 \cdot \sqrt{1550}$ = **19.7 l/s**

Section 3 $= K \cdot \sqrt{\Sigma DU_A + \Sigma DU_B + \Sigma DU_C}$

$= 0.5 \cdot \sqrt{2370}$ = **24.4 l/s**

Calculation of the pipe dimensions for sections 1–3

Table 2: Maximum flow rate for underground pipes or collector pipes at a filling degree of **50 %** in accordance with EN 12056-2

Slope J								
1 % (1:100)	1.5 % (1:66)	2 % (1:50)	2.5 % (1:40)	3 % (1:33)	3.5 % (1:28)	4 % (1:25)	5 % (1:20)	Pipe dimension ø [mm]
2.5	3.1	3.5	4.0	4.4	4.7	5.0	5.6	110
4.1	5.0	5.7	6.4	7.1	7.6	8.2	9.1	125
7.7	9.4	10.9	12.2	13.3	14.4	15.4	17.2	160
14.2	17.4	20.1	22.5	24.7	26.6	28.5	31.9	200
26.9	32.9	38.1	42.6	46.7	50.4	53.9	60.3	250
48.3	59.2	68.4	76.6	83.9	90.7	96.6	108.4	315

Reading example:

- calculated waste water flow rates: 14.1, 19.7, 24.4 l/s
- pipe slope: 2 %
- table, column 2 % incline:
  values for sections 1 and 2 between 10.9 and 20.1 l/s,
  values for section 3 between 20.1 and 38.1 l/s
- table, line 20.1 l/s:
  pipe dimensions for sections 1 and 2 ø 200 mm
- table, line 38.1 l/s:
  pipe dimensions for section 3 ø 250 mm

Table acc. to EN 12056-2: Maximum flow rate for underground pipes or collector pipes with filling degree of 70 % can be found in the chapter “6 Annex“.

5 Installation

5.1 Installation rules and instructions

5.1.1 Basics

In general, the installation of a Geberit Sovent stack follows the same rules as the installation of conventional drainage systems. It does, however, require much less work since secondary ventilation is not necessary. The installation of a Geberit Sovent fitting is similar to the installation of an ordinary branch fitting.

The process can therefore be called simple, easy and quick.

5.1.2 Material requirement

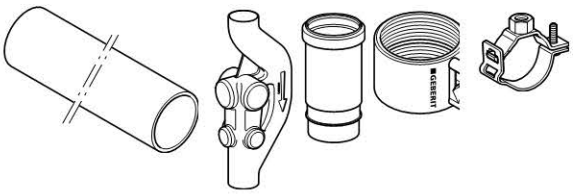

5.1.3 Connection to a Geberit Sovent fitting

The Geberit Sovent fitting has 6 connection possibilities. These connections are capped off and can be used to suit the optimum installation configuration. Branches can be connected to the fitting individually or simultaneously.

Fix fitting in welding machine

1 Cut off required ends.

2 Plane the ends.

3 Welding.

4 Press together while cooling.

Result
The fitting is ready for any type of connection.

5.1.4 Typical prefabrication

Using electroweld sleeve couplings or butt welding, HDPE pipes or Geberit Silent can be connected directly to the Geberit Sovent fitting.

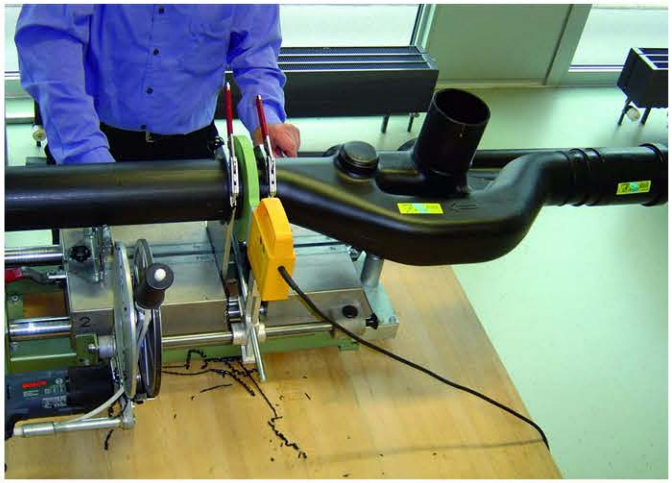

Add one expansion socket on top of the Geberit Sovent fitting and the Geberit HDPE pipe at the bottom.

6 Annex

6.1 Additional facts, figures and recommendations

6.1.1 Frequency factor

EN 12056-2 / SN 592 000 recommends the following drain factors (K).

Typical frequency factor of a building type	K
Irregular use: e.g. residential buildings, guest houses, offices	0.5
Regular use: e.g. hospital, schools, restaurants, hotels	0.7
Frequent use: e.g. public toilets, shower rooms	1.0
Special use: e.g. laboratories	1.2

6.1.2 Maximum flow rate for underground or collector pipes with filling degree of 70 %

Table 3: Maximum waste water load for underground pipes or collector pipes at a filling level of **70 %** in accordance with EN 12056-2

Slope J								
1 % (1:100)	1.5 % (1:66)	2 % (1:50)	2.5 % (1:40)	3 % (1:33)	3.5 % (1:28)	4 % (1:25)	5 % (1:20)	Pipe dimension ø [mm]
4.2	5.1	5.9	6.7	7.3	7.9	8.4	9.4	110
6.8	8.3	9.6	10.8	11.8	12.8	13.7	15.3	125
12.8	15.7	18.2	20.3	22.3	24.1	25.8	28.8	160
23.7	29.1	33.6	37.6	41.2	44.5	47.6	53.3	200
44.9	55.0	63.6	71.1	77.9	84.2	90.0	100.7	250
80.6	98.8	114.2	127.7	140.0	151.2	161.7	180.8	315

6.1.3 Practical application design

Single stack with Geberit Sovent fitting (under ceiling)

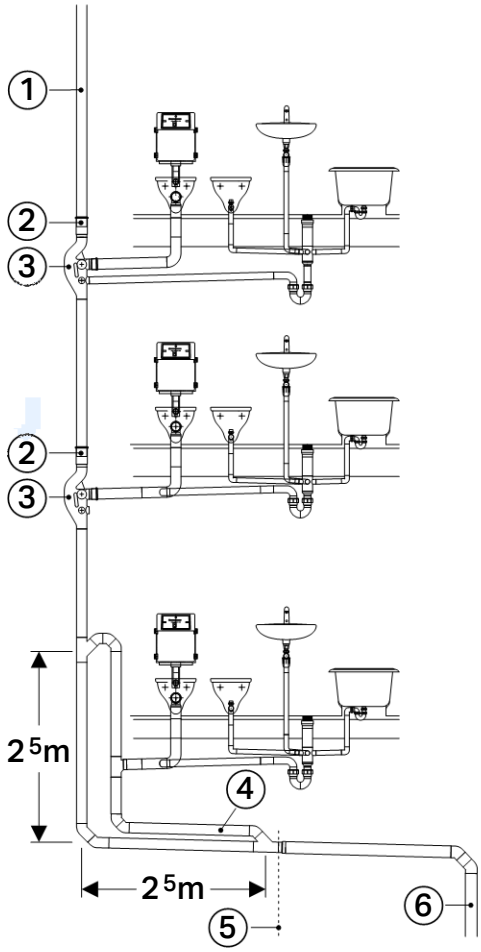

1 Main ventilation through roof
2 Expansion socket
3 Geberit Sovent fitting
4 Presure relief line
5 End of Geberit Sovent system
6 Underground pipe or collector pipe

Geberit Pty Ltd
Unit 8a
6-8 Byfield Street
Macquarie Park
NSW 2113

Phone: 1800 GEBERIT
+61 2 9889 7866
Fax: +61 2 9889 7855
support.au@geberit.com

→ **www.geberit.com.au**

→ AU-en B1171-001 08.2014 © by Geberit Pty Ltd