# MILLI

## PURE WALL BASIN OUTLET 160MM

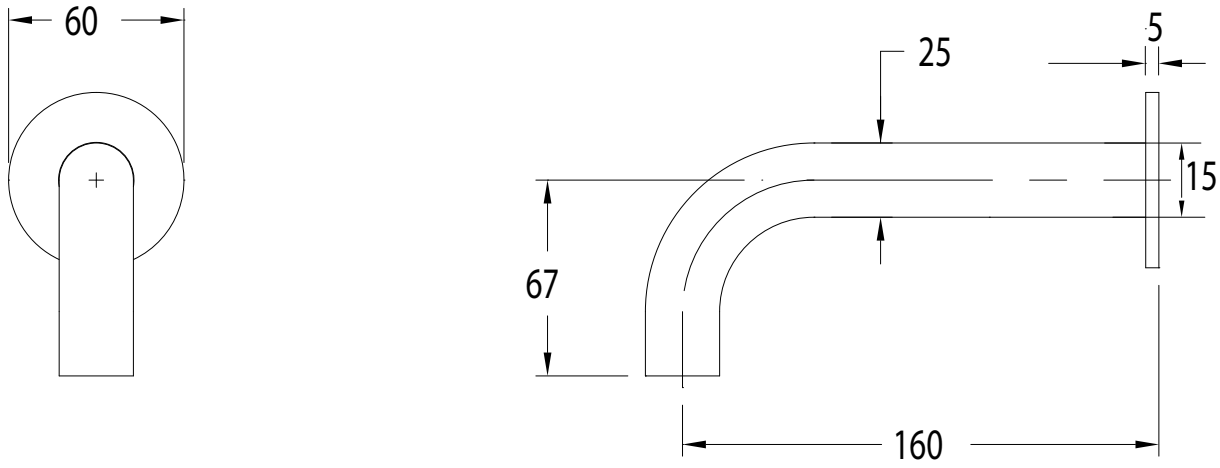


Dimensions are nominal measurements only.

| SPECIFICATIONS | |
|---|---|
| **Recommended Use** | Domestic, Hotel and Commercial. |
| **Finish** | Chrome, Matt Black, Rose Gold,<br>Brushed Gunmetal. |
| **Pressure Rating** | Maximum continuous operating pressure 1000kPa.<br>As per AS/NZS 3500 pressure must be limited to 500kPa on any new home extension or renovation.<br>For best performance and longer life we recommend 150-500kPa<br>Hot and cold water inlet pressure should be equal. |
| **Temperature Rating** | Max continuous working temperature 65 deg. C |
| **Suitable Hot Water Units** | Storage Tank: Yes<br>Continuous Flow: Yes<br>Gravity Feed: Not recommended |

## CLEANING RECOMMENDATIONS

We recommend the use of soapy water or approved cleaners.

This product should not be cleaned with abrasive materials.

Damage caused by any improper treatment is not covered by the product warranty. Refer to Warranty Conditions.

**To see the complete MILLI range go to www.reece.com.au/bathrooms**

The more stars the more water efficient
WATER RATING
www.waterrating.gov.au
8.0 litres per minute
In accordance with AS/NZS 6400
Licence No. 0124
Sussex Taps Pty Ltd

AS/NZS 3718
LIC. 20081

**Disclaimer:** Products in this specification manual must by regulation be installed by licensed and registered trade people. The manufacturer/distributor reserves the right to vary specifications or delete models from their range without prior notification. Dimensions are nominal measurements only. Dimensions and set-outs listed are correct at time of publication however the manufacturer/distributor takes no responsibility for printing errors.

**Tech Page Version 1**