Specification Sheet

Milli Marq Edit Overhead Shower with Arm 250mm Matte Black (4 Star)

21985

SPECIFICATIONS	
Recommended Use	Domestic;Commercial;Hotel
Colour Finish	Matte Black
Primary Material	ABS
Recommended Pressure Range	150 - 500 kPa as per AS3500
Max Continuous Working Pressure (kPa)	500
Max Continuous Working Temperature (deg C)	65
Min Continuous Working Temperature (deg C)	5
Hot Water Unit Suitability	Storage Tank;Continuous Flow
WARRANTY	
Warranty - Domestic Use (Years)	15
Spare Parts & Labour (Years)	1
Please refer to Warranty Page for full Terms and Conditions	

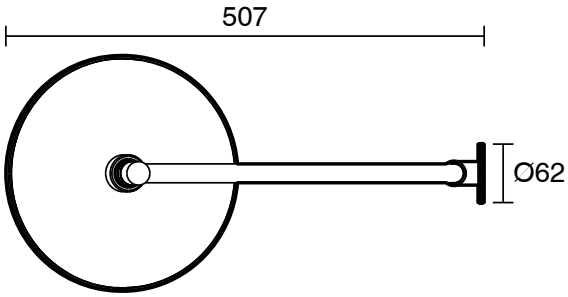

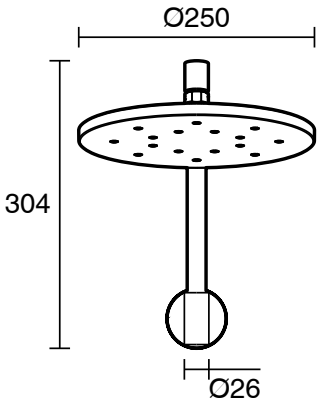

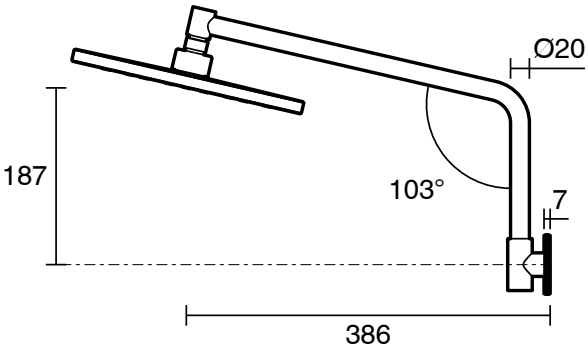

Dimensions are nominal measurements only.

CLEANING RECOMMENDATIONS:
We recommend the use of soapy water or approved cleaners. This product should not be cleaned with abrasive materials. Damage caused by any improper treatment is not covered by the product warranty. Refer to Warranty Conditions

WaterMark
AS/NZS 3662
WMK22181

Disclaimer: Products in this specification manual must by regulation be installed by licensed and registered trade people. The manufacturer/distributor reserves the right to vary specifications or delete models from their range without prior notification. Dimensions are nominal measurements only. Dimensions and set-outs listed are correct at time of publication however the manufacturer/distributor takes no responsibility for printing errors.

Published 07/03/2025

To see the complete Milli range go to
www.reece.com.au