Specification Sheet

Memo Hugo 1 & 3/4 Bowl Sink 1 Taphole Left Hand Bowl with Drainer Granite Black

2402870

SPECIFICATIONS	
Recommended Use	Domestic, Hotel & Commercial
Colour	Black
Finish	Matte
Material	Granite (Quartz and Resin)
Bowl Type	1 & 3/4 Bowl
Bowl Configuration	Left Hand Bowl with Drainer
Sink Installation	Inset and Undermount
Fixings	Clipping System – Undermount
Overflow Configuration	No Overflow
Taphole Configuration	1 Taphole
Plug & Waste Type	Basket Waste
Plug & Waste	Included
WARRANTY	
Warranty - Domestic Use	30 Years
Spare Parts & Labour	12 Months
Please refer to Warranty Page for full Terms and Conditions	

Sinks must be installed using a cutout template.
No responsibility will be taken for damage that occurs where a template has not been used.

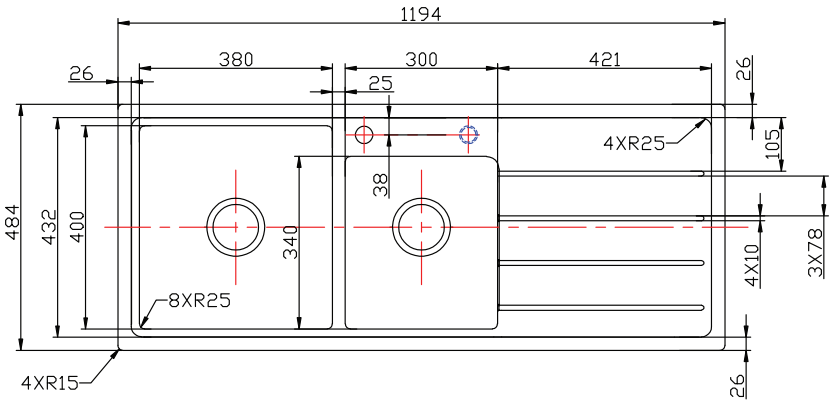

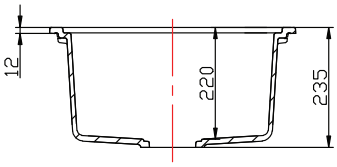

Dimensions are nominal measurements only.

CLEANING RECOMMENDATIONS:
We recommend the use of soapy water or approved cleaners. This product should not be cleaned with abrasive materials. Damage caused by any improper treatment is not covered by the product warranty. Refer to Warranty Conditions.

Disclaimer: Products in this specification manual must by regulation be installed by licensed and registered trade people. The manufacturer/distributor reserves the right to vary specifications or delete models from their range without prior notification. Dimensions are nominal measurements only. Dimensions and set-outs listed are correct at time of publication however the manufacturer/distributor takes no responsibility for printing errors.

Published 04/07/2022

To see the complete Memo range go to
www.reece.com.au