Installation Instructions

Roca

# ATLAS

AS/NZS 3718
WMKA 25255

## A5A3290C0A

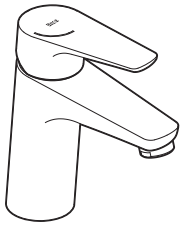

## A525220903 A5A3590C0A

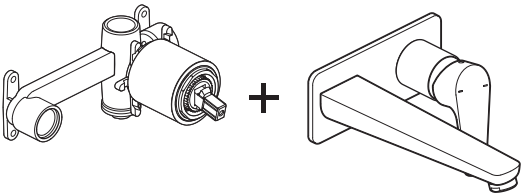

## A5A6290C0A

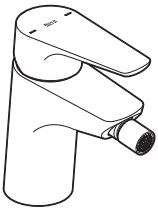

## A5A3790C0A

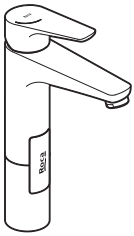

## A5A0903C0A

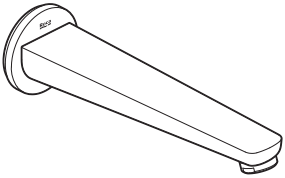

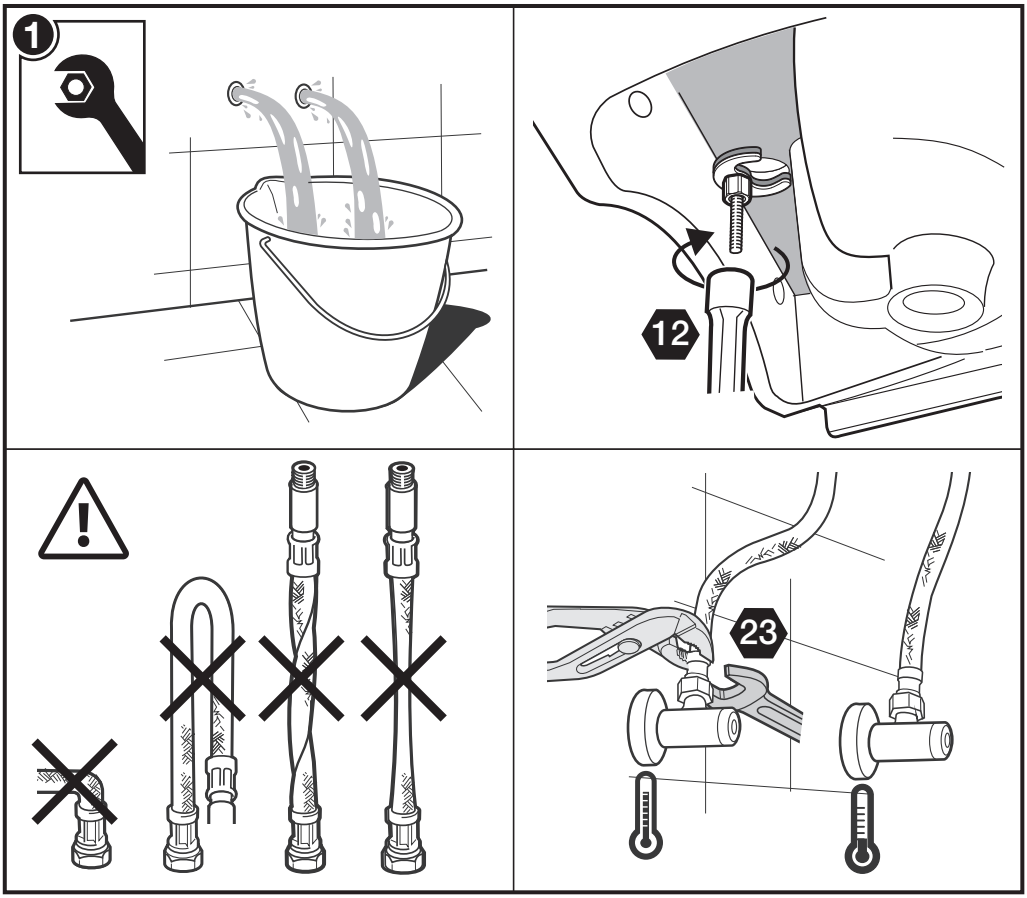


| | | | |
|---|---|---|---|
| P | P<br>kPa | 1000 MAX. | |
| P | P<br>kPa | 500 MAX.<br>100<br>MIN. | 300<br>200 |
| T | °C | – 80 MAX. | – 65<br>– 50 |

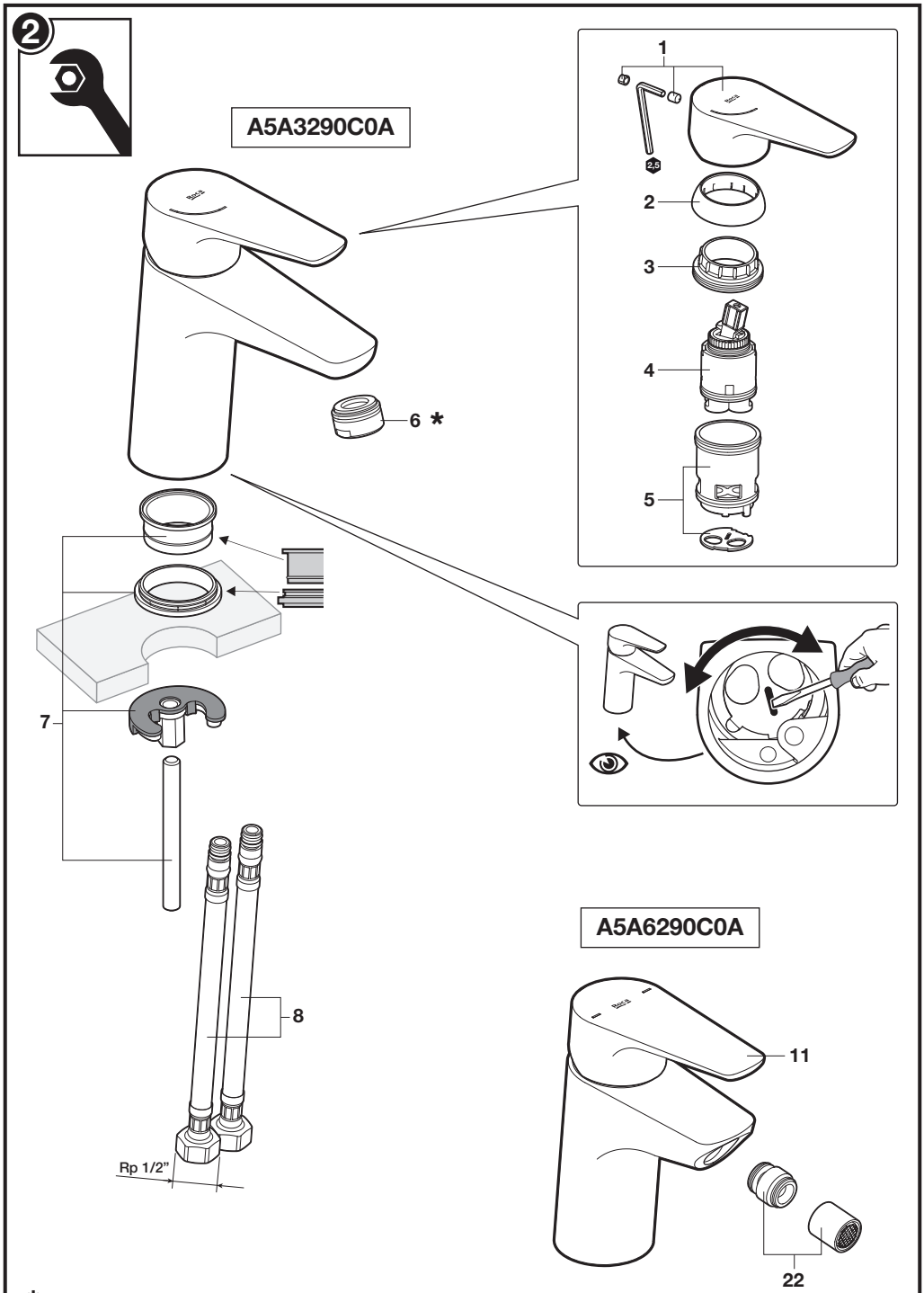


*The aerator/flow controller is pre-fitted.

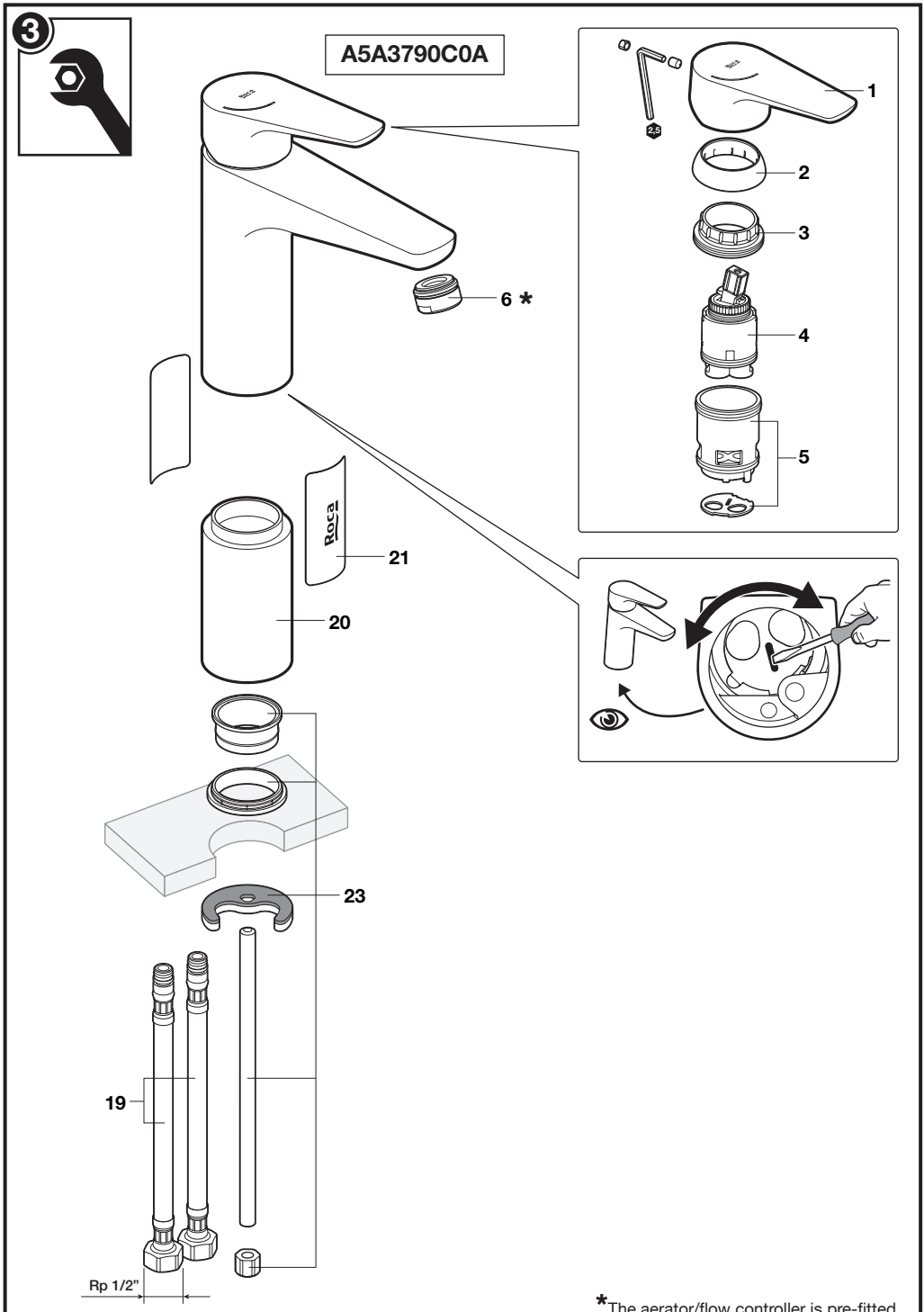


*The aerator/flow controller is pre-fitted.

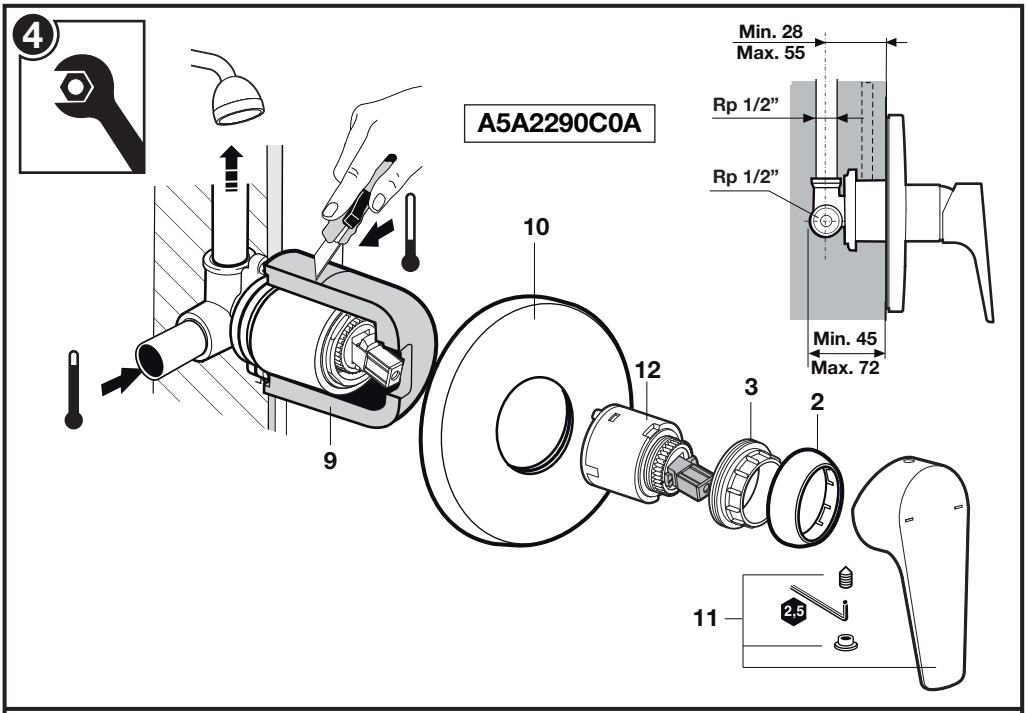
4
A5A2290C0A
Min. 28
Max. 55
Rp 1/2”
Rp 1/2”
Min. 45
Max. 72
10
12
3
2
9
11
2,5

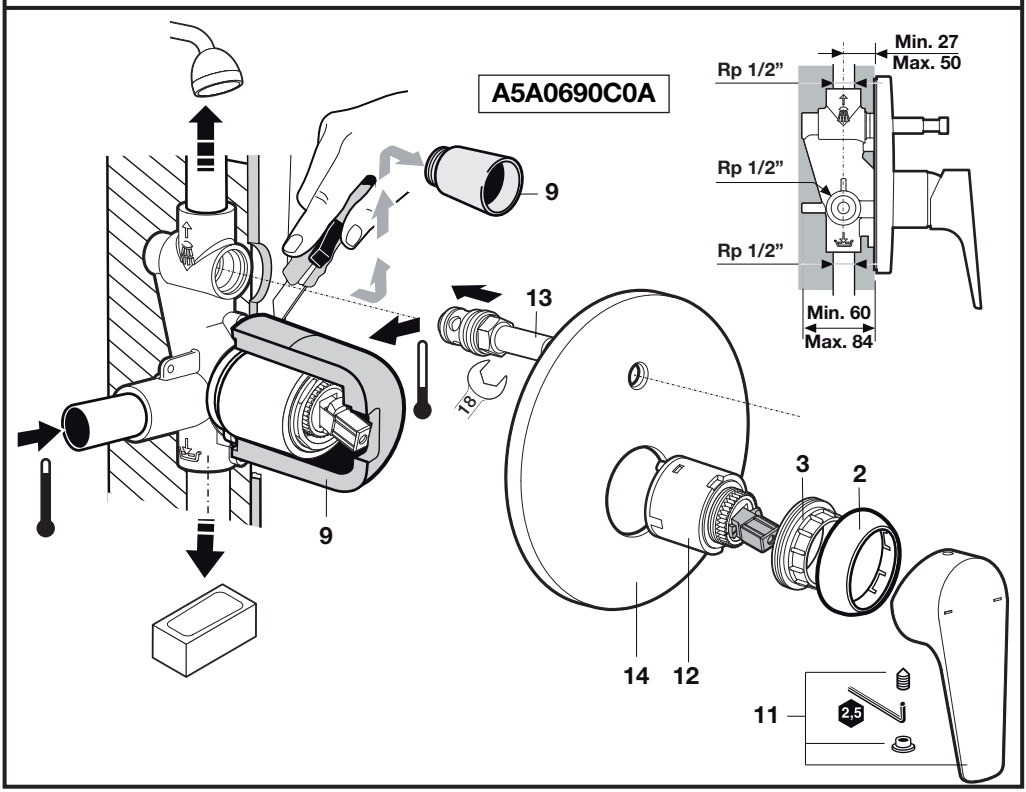
A5A0690C0A
Min. 27
Max. 50
Rp 1/2”
Rp 1/2”
Rp 1/2”
Min. 60
Max. 84
9
13
18
3
2
9
14
12
11
2,5

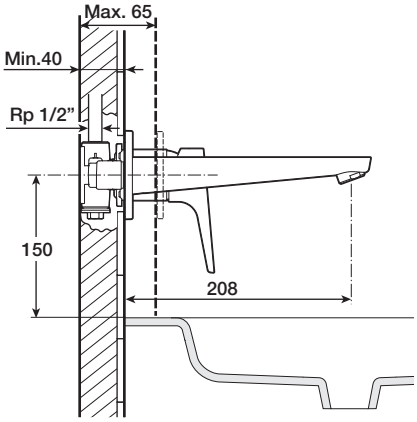


A525220903 + A5A3590C0A

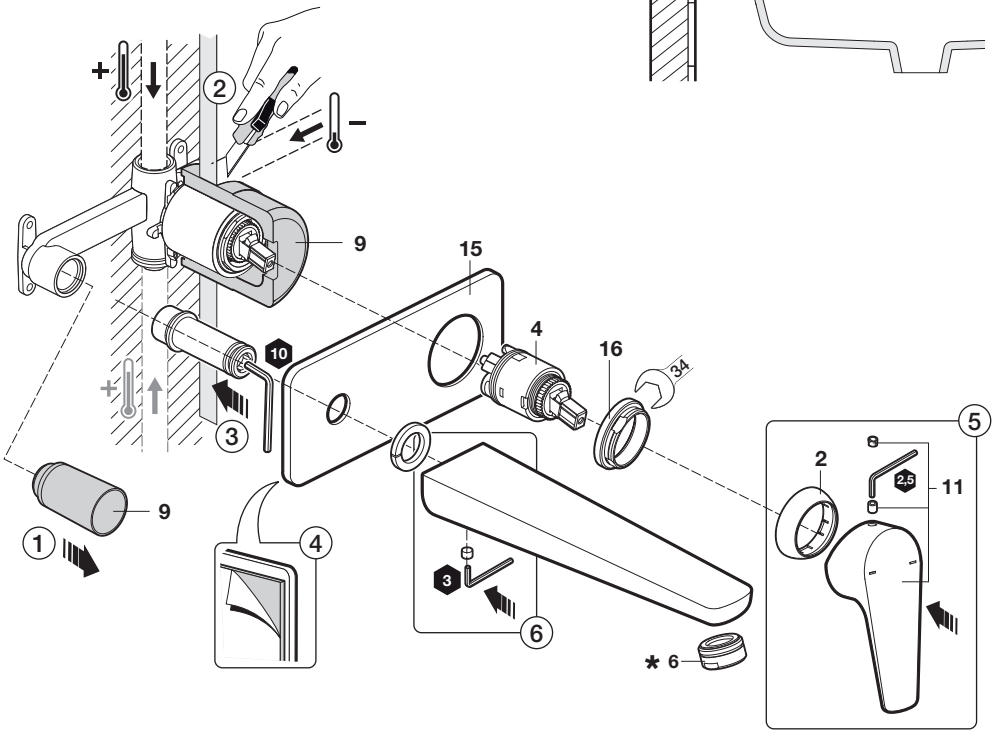


*The aerator/flow controller is pre-fitted.

A5A0903C0A

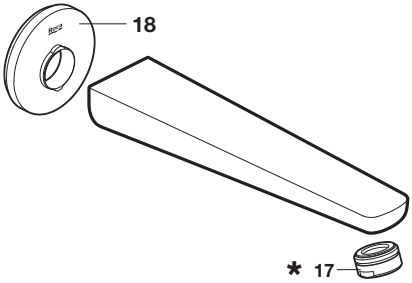

6

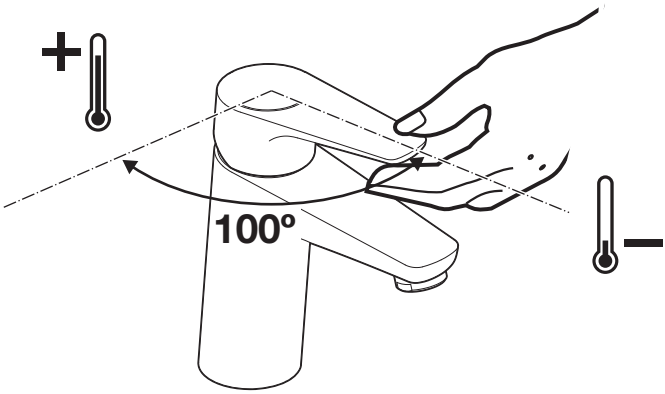


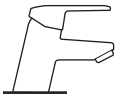

0%

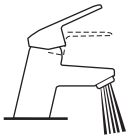

100%

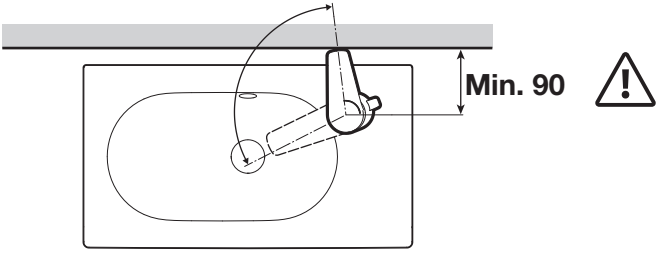

| | | |
|---|---|---|
| 1 | - | AG0116100R |
| 2 | - | AG0085300R |
| 3 | - | A525023507 |
| 4 | - | AG0141207R |
| 5 | - | AG0116200R |
| 6 | - | AG0110900R |
| 7 | - | A525004403 |
| 8 | - | AG0110109R |
| 9 | - | AG0001907R |
| 10 | - | AG0119500R |
| 11 | - | AG0116309R |
| 12 | - | AG0110607R |
| 13 | - | AG0110700R |
| 14 | - | AG0119600R |
| 15 | - | AG0142300R |
| 16 | - | AG0142100R |
| 17 | - | A525004700 |
| 18 | - | AG0145700R |
| 19 | - | A525728008 |
| 20 | - | AG0117400R |
| 21 | - | AG0117207R |
| 22 | - | AG0032300R |
| 23 | - | A525030303 |

7

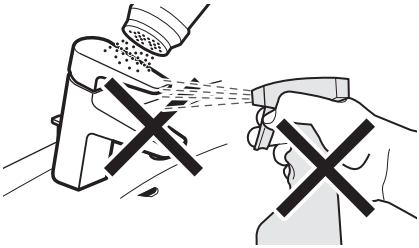

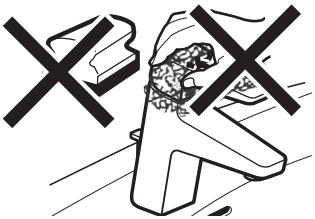

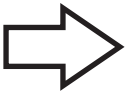

1)

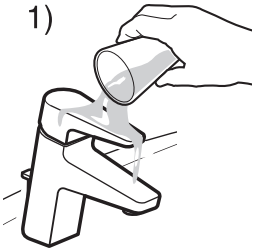

2)

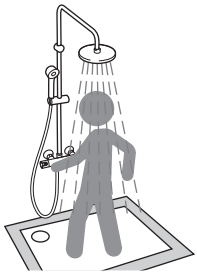

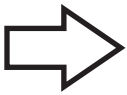

1)

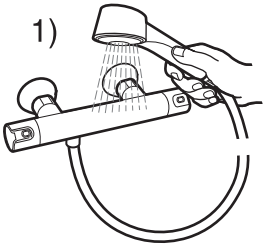

2)

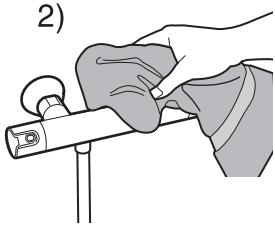

A563090507e

**Roca Sanitario, S.A.**
Avda. Diagonal, 513
08029 Barcelona
SPAIN
www.roca.com.au/

productsupport.rs@roca.net
soporteproducto.rs@roca.net