Specification Sheet

Faucet Strommen Vara Fin Wall Set with Twin Rail Shower Tap System Trimset Matte Black (3 Star) Lead Free

40265

SPECIFICATIONS	
Recommended Use	Domestic; Commercial; Hotel
Colour Finish	Matte Black
Primary Material	DR Brass
Recommended Pressure Range	300 - 500 kPa
Max Continuous Working Temperature (deg C)	65
Min Continuous Working Temperature (deg C)	5
Hot Water Unit Suitability	Storage Tank, Continuous Flow
WARRANTY	
Warranty - Domestic Use (Years)	40
Spare Parts & Labour (Years)	10
Please refer to Warranty Page for full Terms and Conditions	

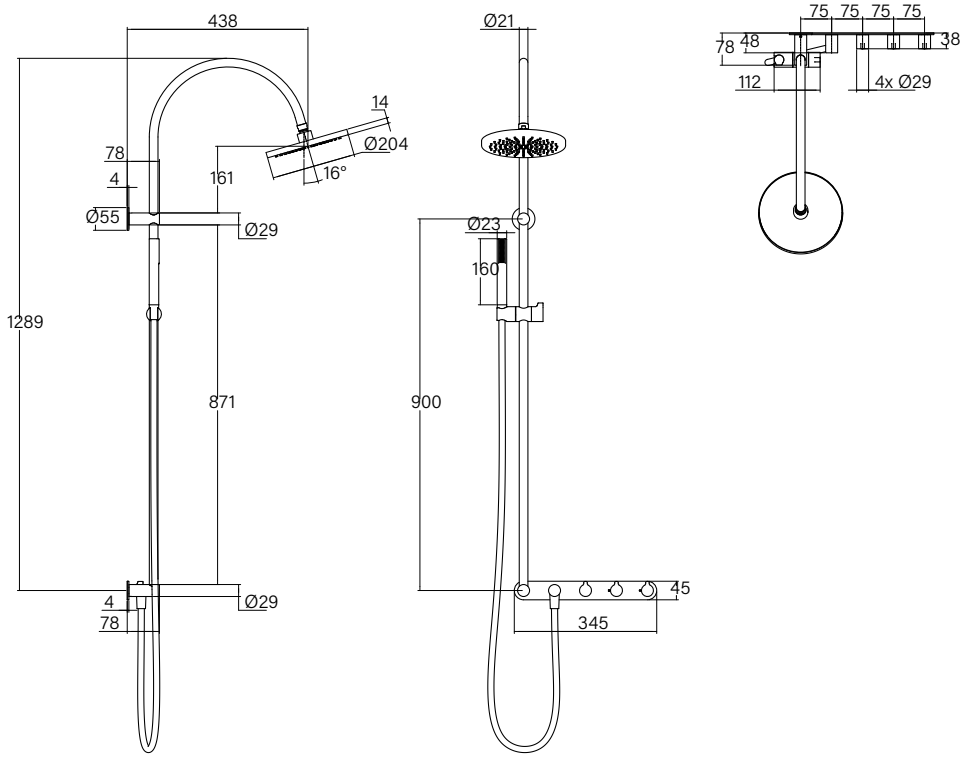

Dimensions are nominal measurements only.

The more stars the more water efficient
WATER RATING
www.waterrating.gov.au
9 litres per minute
In accordance with AS/NZS 6400
Licence No. 0084
Faucet Australia

CLEANING RECOMMENDATIONS:
We recommend the use of soapy water or approved cleaners. This product should not be cleaned with abrasive materials. Damage caused by any improper treatment is not covered by the product warranty. Refer to Warranty Conditions

WaterMark
WM-022284
AS/NZS 3662

Disclaimer: Products in this specification manual must by regulation be installed by licensed and registered trade people. The manufacturer/distributor reserves the right to vary specifications or delete models from their range without prior notification. Dimensions are nominal measurements only. Dimensions and set-outs listed are correct at time of publication however the manufacturer/distributor takes no responsibility for printing errors.

Published 11/02/2026

To see the complete Faucet Strommen Vara range go to www.reece.com.au