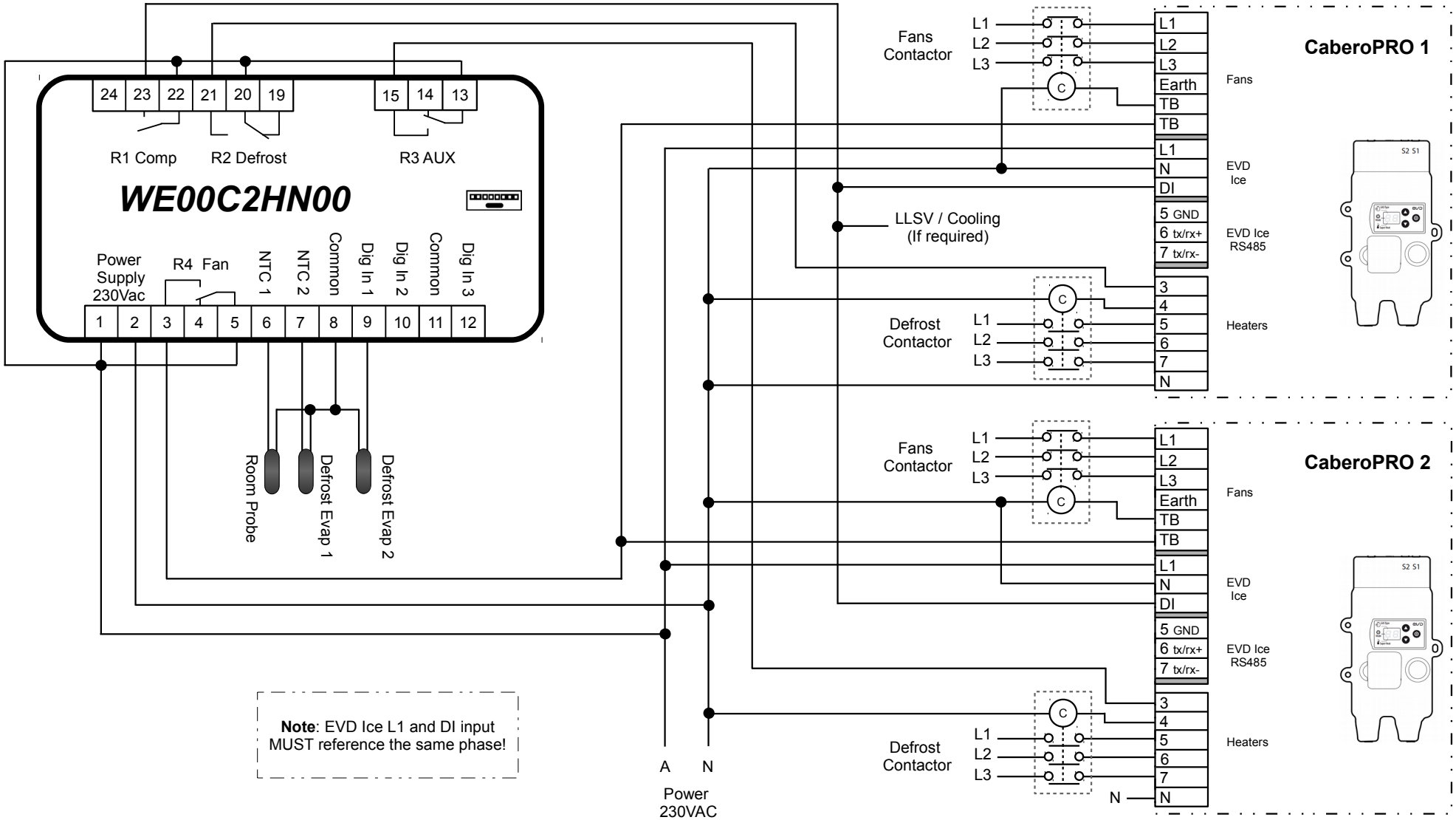

Application Guide:
Smartcella Low Temp,
2 x CaberoPRO CHE,
with 500mm Fans

CAREL

Phone 02-8762 9200
Email cst.au@carel.com

Part number	Description
WE00C2HN00	Smartcella, L/T four output, 230V
NTC030HP03	Carel NTC Sensor, 3m
+0300038EN	EVD Ice user manual
+0300084EN	Smartcella user manual

Drawn by: BF Date: 01/03/2018

Checked by: SS Date: 05/03/2018

Drawing: Smartcella_LT_2x_CHE_CaberoPRO_500mm_Fans

Rev: 2.0

Connected

NOT Connected

Normally Open contact

Normally Closed contact

PARAMETERS`
St = Set point
/A3 = 2 Defrost probe (2nd evap probe enable)
rd = Differential
d0 = Defrost type (0 = elec / temp, 1 = h.gas / temp, 4 = elec / temp - time)
dI = Defrost intervals (hours)
dt1 = Defrost termination temp (evap temp)
dt2 = Defrost termination temp evap 2 (evap temp)
dP1 = Max defrost duration (mins)
dP2 = Max defrost duration evap 2 (mins)
A0 = Alarm differential
A1 = Alarm type (0 = relative, 1 = absolute)
AL = Low alarm threshold
AH = High alarm threshold
Ad = Alarm delay (mins)
F2 = Fans cycle with comp (0 = No)
F3 = Fans in defrost (1 = No)
Fd = Fans delay (after dripping)
H1 = 4 Aux config (2nd evap defrost output)

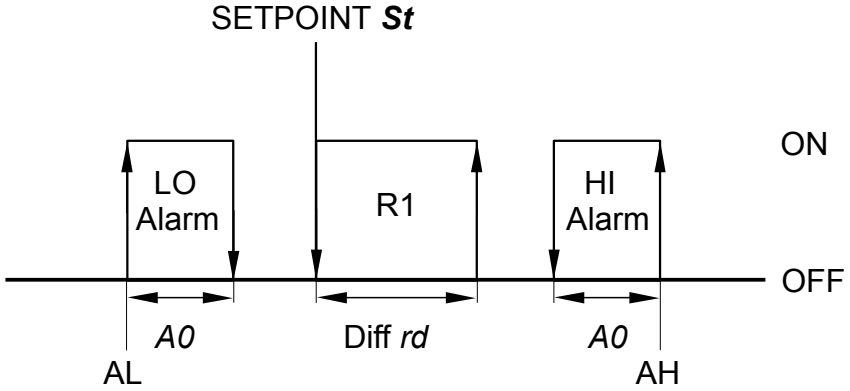

CAREL
Phone 02-8762 9200
Email cst.au@carel.com

Part number	Description
WE00C2HN00	Smartcella, L/T four output, 230V
NTC030HP03	Carel NTC Sensor, 3m
+0300038EN	EVD Ice user manual
+0300084EN	Smartcella user manual

Drawn by: BF Date: 01/03/2018

Checked by: SS Date: 05/03/2018

Drawing: Smartcella_LT_2x_CHE_CaberoPRO_500mm_Fans
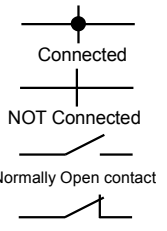
Rev: 2.0