FASCO MOTORS MAY PROVIDE TECHNICAL ASSISTANCE TO OUR CUSTOMERS IN MANY AREAS. HOWEVER, SINCE FASCO MOTOR IS NOT AWARE OF ALL DATA CONCERNING THE USE AND APPLICATION OF THIS MOTOR, THE FITNESS OF THE MOTOR FOR THE APPLICATION MUST BE DETERMINED BY AND IS THE RESPONSIBILITY OF THE CUSTOMER.

V 20

MOTOR SPECIFICATION

808534LTB-A12

Q.R. No.	Y001040			CUSTOMER NO.	-			
CUSTOMER	VARIOUS							
MOTOR RATING	VOLTS	415	Hz	50	Ph	3	Duty	AOM
	RPM.	1400				0.9		AMPS
	NOM. OUTPUT	180 WATTS						
ROTATION	CLOCK WISE DRIVE END (PHASED ROTATION)							
CAPACITOR	START	---------	µF/ V	RUN	--------	µF/ V		
ENCLOSURE	TOTALLY ENCLOSED							
MOTOR TYPE	3 PH			INSULATION CLASS	B 130			
THERMAL PROTECTION	NIL							
APPLICATION	FAN - SHAFT HORIZONTAL							
BEARING D.E.	6202 DDU.			LUBRICATION	LONG LIFE, WIDE RANGE			
BEARING N.D.E.	6202 DDU.							
SUPPLY LEAD	------							
EARTH PROVISION	IN TERM. BOX							
BASIC BUILD SPECIFICATION	305-570-05			PAINT/ COLOUR	PC GREY CASE PLAIN E/SHIELDS			
PERFORMANCE SPECIFICATION	SP85001-02							
CONNECTION DIAGRAM	393-000-AM			RATING LABEL	LABELSTD.FMT			

FASCO

DESIGNED AND MANUFACTURED TO AUSTRALIAN STANDARDS & SPECIFICATIONS

ddmmyyxxxx

MODEL	808534LTB-A12

VOLTS	415	TYPE	3 PHASE	Hz	50		
WATTS	180	DUTY	AOM	PH	3		
AMPS	0.90	CLASS	B130	PROT.		NIL	
R.P.M.	1400	uF/V	S NIL		R	NIL	
WATTS IN MAX			MAX kPa				

87.0 × 35.0

FINAL INSPECTED MOTORS MUST COMPLY WITH ELECTRIC MOTOR VIBRATION SPECIFICATION (ES049)

THIRD ANGLE PROJECTION

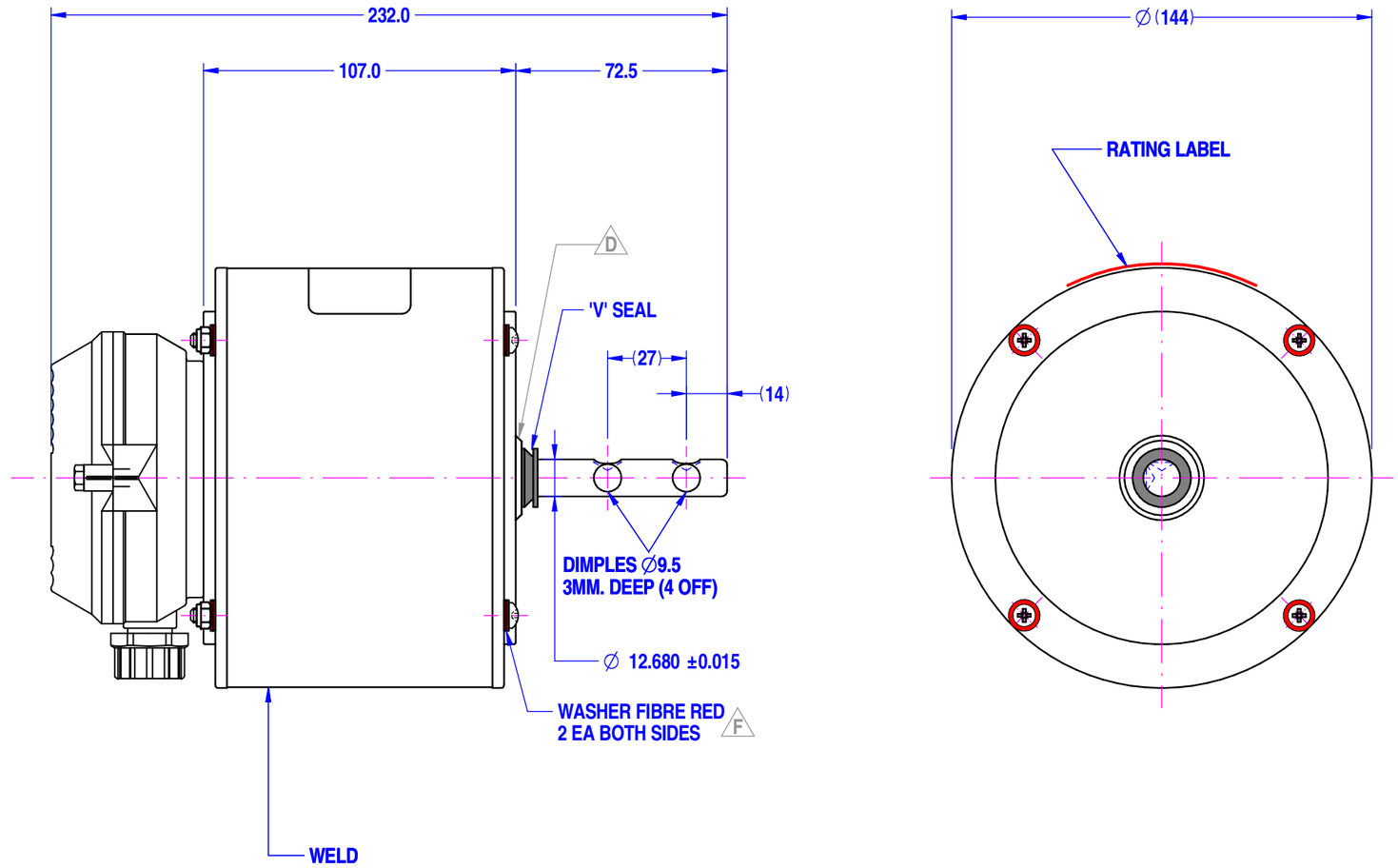

SPECIAL REQUIREMENTS:

1)_WEATHERPROOF MOTORS TO ES050
2)_NON DRIVE ENDSHIELD TO BE ASSSEMBLED SO THAT LEAD EXIT HOLE IS CLOSEST TO THE WELD.
3)_WASHER FIBRE TO BE FITTED ON TIE RODS BOTH SIDES. F

UNLESS OTHERWISE SPECIFIED : DIMENSIONS ARE IN MM.
TOLERANCES

DECIMALS	ANGULAR
.X ± 1.0	± 30'
.XX ± 0.1	

THIS DRAWING REMAINS THE PROPERTY OF FASCO MOTORS AND MAY NOT BE USED, COPIED OR ISSUED WITHOUT WRITTEN PERMISSION FROM FASCO MOTORS

MOTOR WEIGHT 4.53 kg.

DRAWN	Oran	04/05/2001
CHECKED	Pipat	08/11/2018
RELEASED	Suksakorn	08/11/2018
SCALE	N.T.S.	

FASCO THAILAND
29/7-8 MOO 3, BANGKRUAY - SAINOI Rd., BANGKRANG, MUANG NONTHABURI DISTRICT, NONTHABURI 11000 THAILAND

FRAME	
STATUS	R
SHEET	A3
DWG. NO.	808534LTB-A12
REVISION	G

MOTOR

B001:8534T-180-XAH

MIC1804207
By: Veeranut
Date:07/11/2018
MIC
Note: G: REMOVE C-TICK FROM LABEL