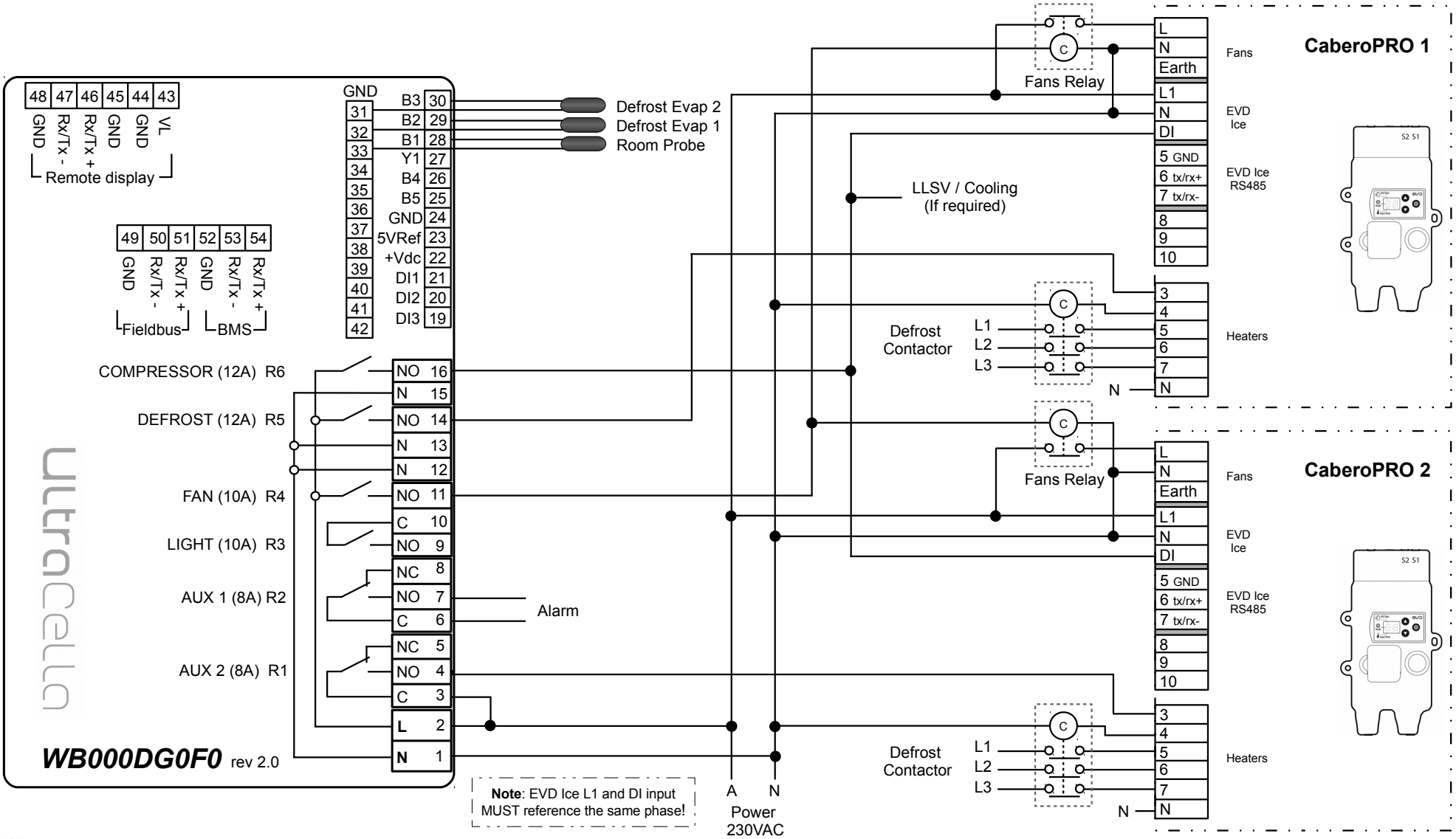

**Application Guide:**
Ultracella Low Temp, with
2 x CaberoPRO CHE


CAREL
Phone 02-8762 9200
Email cst.au@carel.com


| Part number | Description |
|---|---|
| WB000DG0F0 | UltraCella double display, revision 2.0 |
| NTC030HP03 | Carel NTC temperature sensor, 3m |
| PGDEWB0FZK | Ultracella service pGD tool |
| +0300083EN | UltraCella user manual |

Drawn by: BF Date: 01/03/2018

Checked by: PV Date: 08/03/2018

Drawing: Ultracella_LT_2x_CHE_CaberoPRO

Rev: 2.0

Connected
NOT Connected
Normally Open contact
Normally Closed contact

| Ultracella Parameters | |
|---|---|
| **1. Probes (PRO)** | **6. Evaporator Fan (Fan)** |
| **/A2** = 1 Enable defrost probe B2 | **F0** = Fan management<br>3 = Evap Temp, 4 = Fan always On |
| **/A3** = 1 Enable defrost probe B3 | **F1** = Fan start temp (evap) |
| **2. Control (CtL)** | **Frd** = Fan differential |
| **St** = Setpoint | **F2** = Fan deactivation delay (min),<br>n/a if F0 = 4 |
| **rd** = Differential | **F3** = Fans in defrost 0 = On, 1 = Off |
| **4. Defrost (dEF)** | **F5** = Fan cut out temp (Absolute) |
| **d0** = Defrost type<br>0 = electric/temp, 2 = electric/time | **7. Configuration (CnF)** |
| **dI** = Defrost intervals (hrs) | **H0** = Serial address |
| **dt1** = Defrost terminate temp, evap 1 | **H1** = 1, Aux 1 Alarm Output |
| **dP1** = Max defrost duration, evap 1 (min) | **H5** = 4, Aux 2 Defrost Output 2 |
| **dt2** = Defrost terminate temp, evap 2 | **tr1** = Enable temperature data logging.<br>3 = Regulation probe |
| **dP2** = Max defrost duration, evap 2 (min) | **trc** = Sample time for recording (min) |
| **d13** = *Defrost both evaps together (0 = Yes) | **10. Door & Lights (doL)** |
| **5. Alarm (ALM)** | **A3** = Disable door switch<br>1 = Disabled |
| **A1**= Alarm type<br>0 = relative, 1 = absolute | |
| **AL** = Alarm low threshold | |
| **AH** = Alarm High threshold | |
| **Ad** = Alarm delay (min) | |

* Defrost of both evaps is initiated together, when separated, evap 2 defrost start once evap 1 had finished.

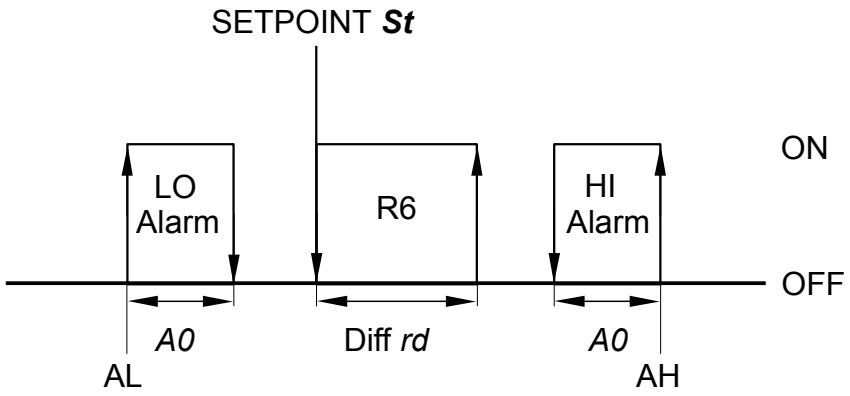


**Comissioning Tool:**
PGDEWB0FZK

**How to retrieve the data log with USB:**
1/ Insert a USB into the Ultracella

2/ Press 'PRG' and 'Set' until the display shows 'HcP', then scroll to 'LoG'.

3/ Press 'Set' to confirm the download, the display will flash 'LoG' during the download.

4/ Press 'PRG' until you exit the menu, remove the USB.


CAREL
Phone 02-8762 9200
Email cst.au@carel.com


| Part number | Description |
|---|---|
| WB000DG0F0 | UltraCella double display |
| NTC030HP03 | Carel NTC temperature sensor, 3m |
| PGDEWB0FZK | Ultracella service pGD tool |
| +0300083EN | UltraCella user manual |

Connected
NOT Connected
Normally Open contact
Normally Closed contact

Drawn by: BF Date: 01/03/2018
Checked by: PV Date: 08/03/2018
Drawing: Ultracella_LT_2x_CHE_CaberoPRO
Rev: 2.0