Specification Sheet

Roca Atlas Bidet Mixer Chrome (5 Star)

SPECIFICATIONS	
Recommended Use	Domestic, Hotel & Commercial
Colour	Chrome
Recommended Pressure Range	150 - 500kPa
Max Continuous Working Pressure	1000kPa
Max Continuous Working Temperature	80°C
Suitable for Storage Tank Hot Water	Yes
Suitable for Continuous Flow Hot Water	Yes
Suitable for Gravity Feed Hot Water	No
Hot and Cold water inlet pressure should be equal	
WARRANTY	
Warranty - Domestic Use	15 Years
Spare Parts & Labour	12 Months
Please refer to Warranty Page for full Terms and Conditions	

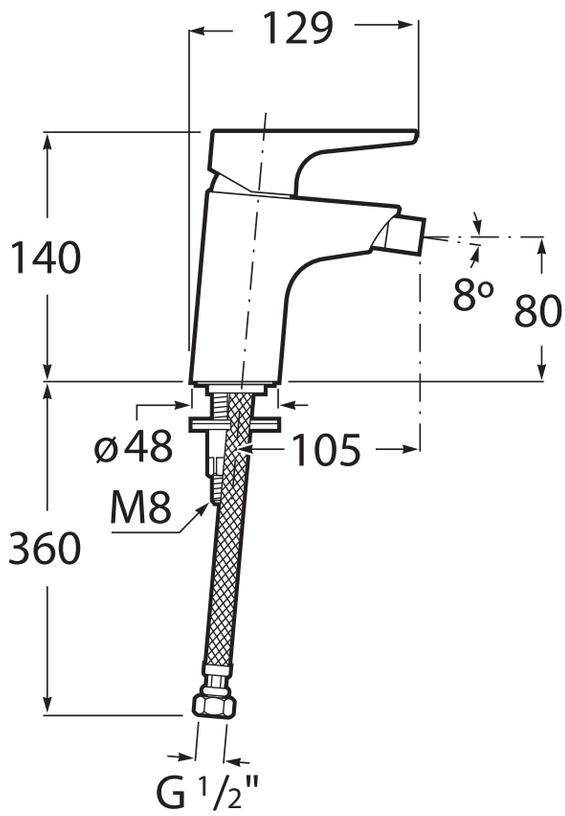

Dimensions are nominal measurements only.

Disclaimer: Products in this specification manual must by regulation be installed by licensed and registered trade people. The manufacturer/distributor reserves the right to vary specifications or delete models from their range without prior notification. Dimensions are nominal measurements only. Dimensions and set-outs listed are correct at time of publication however the manufacturer/distributor takes no responsibility for printing errors.

Published 05/05/2022

The more stars the more water efficient
WATER RATING
www.waterrating.gov.au
6.0 litres per minute
In accordance with AS/NZS 6400
Licence No. 0137
Bathroom Products Austalia

WaterMark
AS/NZS 3718
WMKA-25255

To see the complete ROCA range go to
www.reece.com.au/bathrooms