Amiblu®
Pipes designed for generations

HOBAS®

Hobas GRP pressure pipe systems

Technical product data

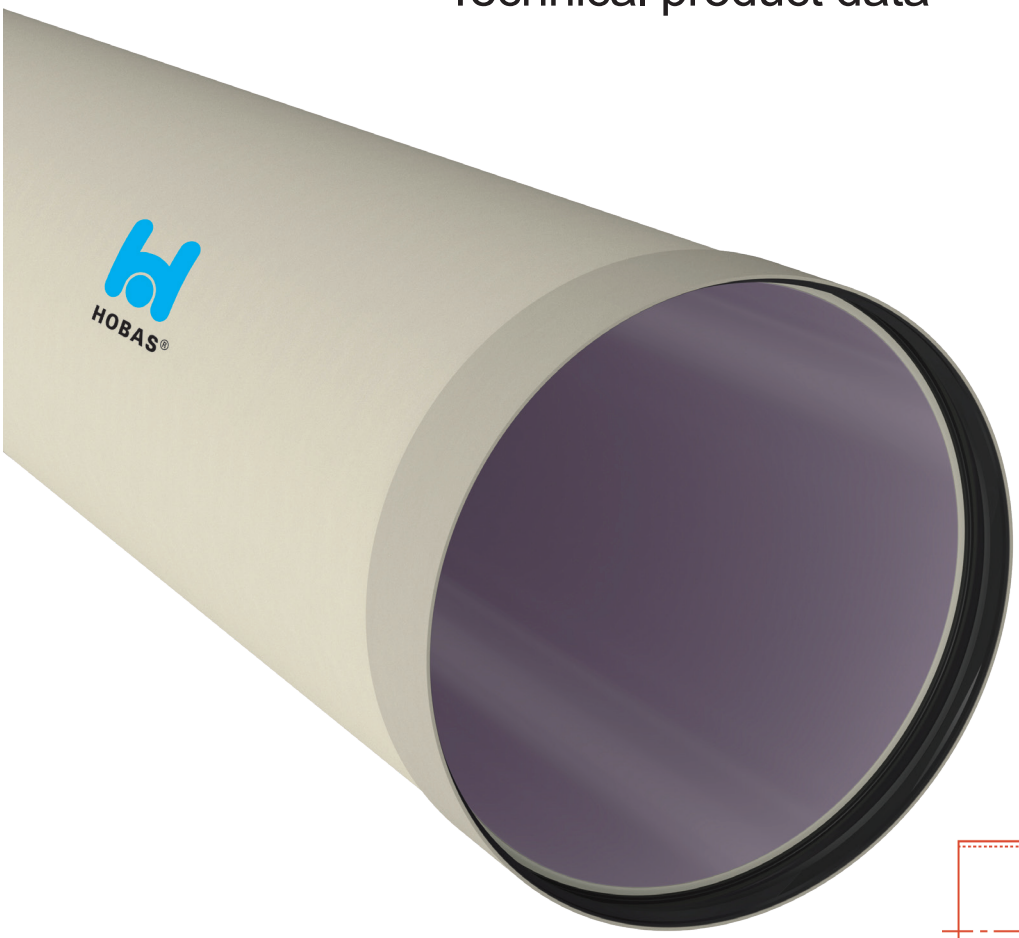

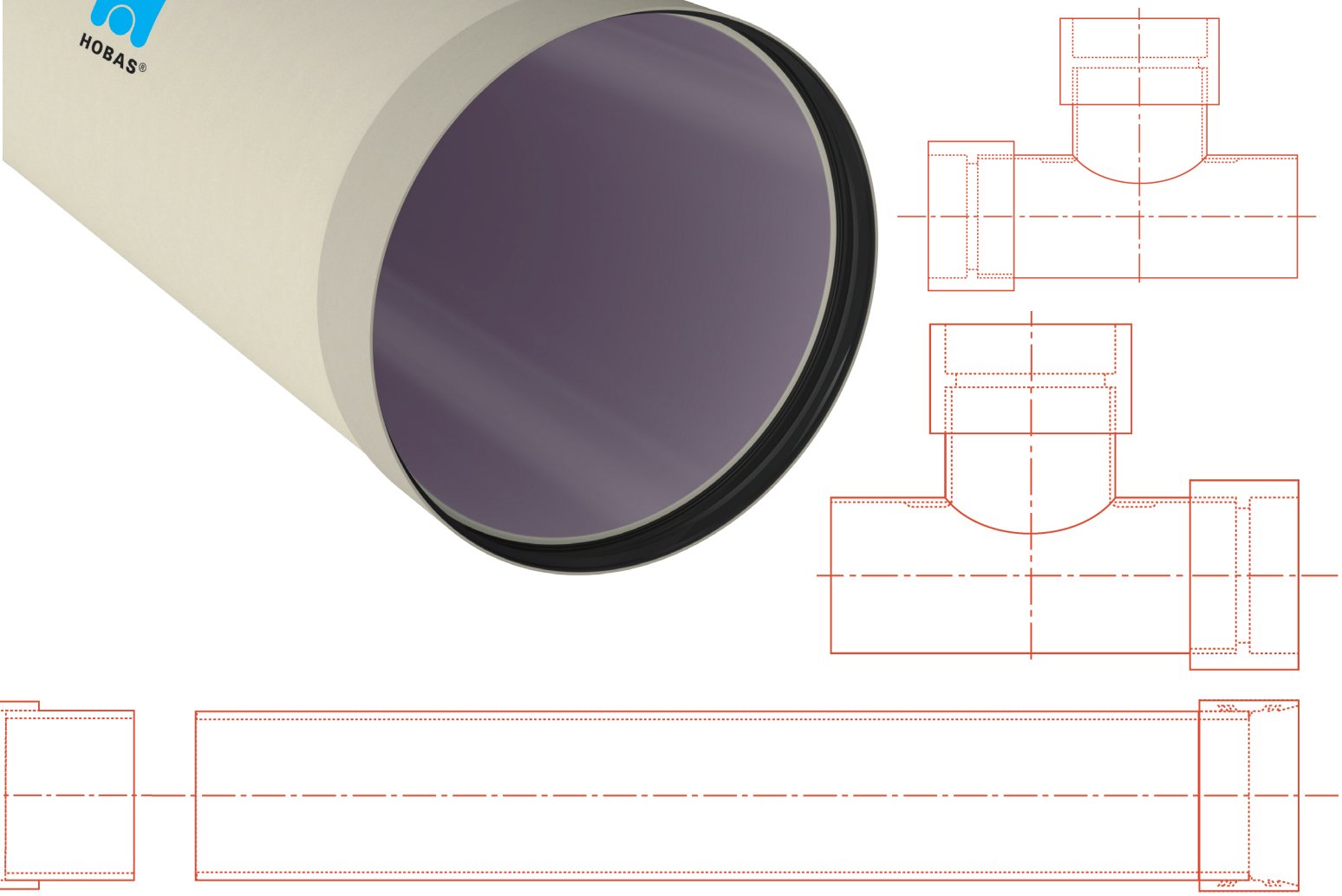

HOBAS®

Amiblu Pipe Systems
Engineered for the next 150 years

© **Amiblu Holding GmbH | Publication:** 01/2020 | Rev. 1.2

All rights reserved. No part of this document may be reproduced in any form or by any means without prior written permission. All data, especially technical data, is subject to subsequent modifications. The data given is not binding and must therefore be checked in each individual case and revised as appropriate.

Contents

	Page	
	4	Abbreviations
PIPES	5	Pressure Pipe PN 6/10
	7	Pressure Pipe PN 16/20
PIPE JOINTS	9	Joints and Couplings
FITTINGS	11	Segmented Elbow PN 6
	13	Segmented Elbow PN 10
	15	Concentric Tee PN 6
	23	Concentric Tee PN 10
	31	Reducer PN 6
	33	Reducer PN 10
	35	Notes

This version replaces all previous versions. For all current data and values please visit www.amiblu.com.

Abbreviations

α	Angle
B1	d_e to product standard (EN 1796/EN 14364)
B2	d_e to GRP and casting standards
B3	d_e to GRP and PVC standards
B4	d_e to GRP and steel standards
BE	Branch eccentricity
BL	Branch length / Bend length
BLL	Branch laying length
BP	Branch position
d_e	External diameter
d_{eB}	External diameter branch
d_{eH}	External diameter header
d_{eL}	External diameter large
d_{eS}	External diameter small

DN	Nominal diameter
DN_B	Nominal diameter branch
DN_H	Nominal diameter header
DN_L	Nominal diameter large
DN_S	Nominal diameter small
DS	Diameter series
e	Wall thickness
HLL	Header laying length
LL	Laying length
LN	Nominal length
m	Weight
PN	Nominal pressure
R	Radius
SN	Nominal stiffness

Pressure Pipe PN 6/10

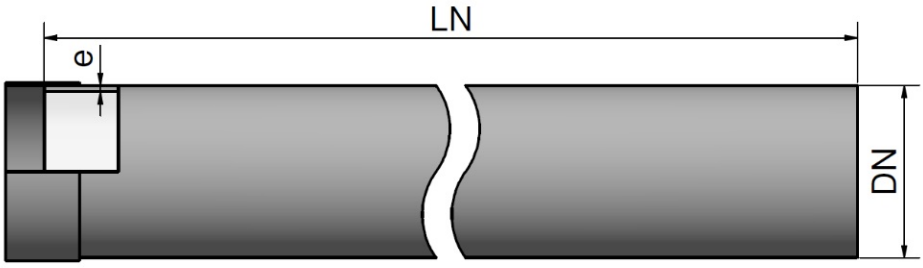

Portfolio as sold by Amiblu. For the full range of the Hobas technology, visit www.hobas.com.

			PN 6						PN 10					
			SN 5000		SN 10000		SN 20000		SN 5000		SN 10000		SN 20000	
DN	DS	d_e [mm]	m [kg/m]	e [mm]	m [kg/m]	e [mm]	m [kg/m]	e [mm]	m [kg/m]	e [mm]	m [kg/m]	e [mm]	m [kg/m]	e [mm]
200	B2	220			8	5	9	7			7	5	9	7
250	B2	272			11	7	14	8			11	6	13	8
300	B2	324			16	8	19	9			15	8	19	9
350	B2	376			20	9	25	11			19	9	24	10
400	B2	427			26	10	32	12			25	9	31	12
450	B2	478			31	10	38	13			29	10	37	13
500	B2	530			38	11	47	14			36	11	45	14
550	-	550	33	10	41	12	51	15	30	9	39	12	48	15
600	B1	616	41	11	51	14	64	17	38	10	48	13	60	16
650	-	650	45	11	57	14	71	18	41	11	53	14	66	17
700	B1	718	54	12	69	16	86	19	50	12	64	15	81	19
750	-	752	59	13	76	17	95	20	54	12	70	16	88	19
800	B1	820	70	14	90	18	112	22	64	13	83	17	104	21
860	-	860	77	15	99	18	123	23	70	14	91	18	114	22
900	B1	924	88	16	113	20	141	25	80	15	105	19	131	24
960	-	960	95	16	122	21	152	26	86	16	114	20	141	25
1000	B1	1026	110	18	140	22	174	28	99	17	130	21	162	27
1100	-	1099	125	19	161	24	199	30	113	18	149	23	185	29

The standard pipe lengths are 3 and 6 m. Other lengths are available on request.
Other stiffness classes are available on request.

Amiblu Holding GmbH | Pischeldorfer Str. 128 | 9020 Klagenfurt | Austria | +43 463 482424 | www.amiblu.com | info@amiblu.com
© Amiblu Holding GmbH. Figures may slightly vary due to manufacturing tolerances. Amiblu does not accept any liability for errors, omissions, and subsequent changes to technical data.
Publication: 01/2020

Pressure Pipe PN 6/10

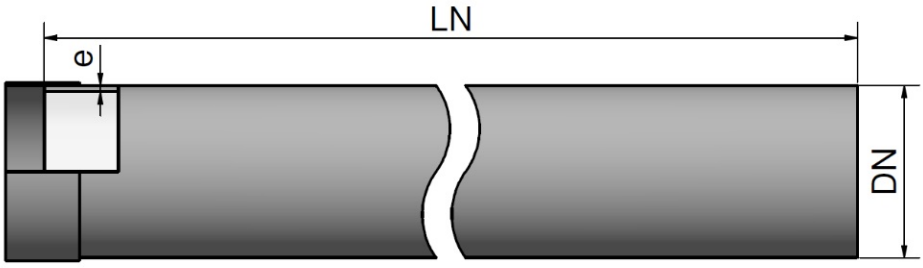

Portfolio as sold by Amiblu. For the full range of the Hobas technology, visit www.hobas.com.

			PN 6						PN 10					
			SN 5000		SN 10000		SN 20000		SN 5000		SN 10000		SN 20000	
DN	DS	d_e [mm]	m [kg/m]	e [mm]	m [kg/m]	e [mm]	m [kg/m]	e [mm]	m [kg/m]	e [mm]	m [kg/m]	e [mm]	m [kg/m]	e [mm]
1200	B1	1229	156	21	200	27	248	34	141	20	186	26	230	32
1280	-	1280	168	22	216	28	269	35	153	21	201	27	249	33
1400	B1	1434	210	24	270	31	336	39	190	23	251	30	311	37
1500	-	1499	225	25	290	32	359	40	204	24	272	32	331	38
1535	-	1535	240	26	310	33	385	41	216	25	284	32	354	39
1600	B1	1638	272	28	352	35	436	44	246	27	328	35	401	42
1720	-	1720	299	29	387	37	480	46	271	28	361	36	441	44
1800	B1	1842	342	31	443	40	550	50	311	30	412	39	504	47
1940	-	1937	377	33	489	42	607	52	344	32	454	41	556	50
2000	B1	2047	420	34	546	44	676	55	384	34	506	43	619	52
2160	-	2160	467	36	606	47	751	58	427	35	561	45	688	55
2200	B1	2250	506	38	658	49	814	60	464	37	608	47	746	57
2400	-	2400	577	41	749	52	928	65	528	40	692	51	849	61
2453	-	2453	602	41	782	53	968	66	552	41	722	52	886	63
2555	-	2555	652	43	847	55	1049	69	598	42	782	54	959	65

The standard pipe lengths are 3 and 6 m. Other lengths are available on request.
Other stiffness classes are available on request.

Amiblu Holding GmbH | Pischeldorfer Str. 128 | 9020 Klagenfurt | Austria | +43 463 482424 | www.amiblu.com | info@amiblu.com
© Amiblu Holding GmbH. Figures may slightly vary due to manufacturing tolerances. Amiblu does not accept any liability for errors, omissions, and subsequent changes to technical data.
Publication: 01/2020

Pressure Pipe PN 16/20

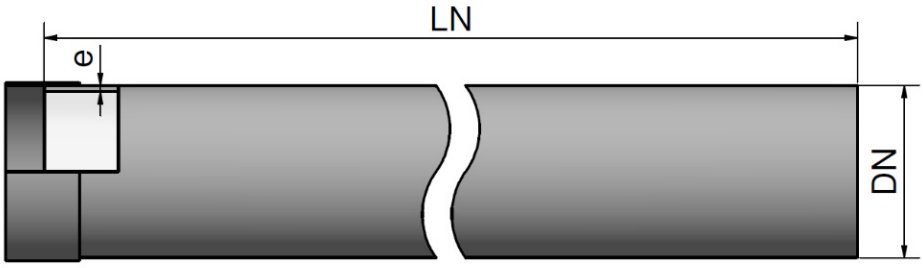

Portfolio as sold by Amiblu. For the full range of the Hobas technology, visit www.hobas.com.

			PN 16						PN 20					
			SN 5000		SN 10000		SN 20000		SN 5000		SN 10000		SN 20000	
DN	DS	d_e [mm]	m [kg/m]	e [mm]	m [kg/m]	e [mm]	m [kg/m]	e [mm]	m [kg/m]	e [mm]	m [kg/m]	e [mm]	m [kg/m]	e [mm]
200	B2	220			7	5	8	6			7	6	8	6
250	B2	272			10	6	13	8			10	6	12	8
300	B2	324			14	7	17	9			14	7	16	9
350	B2	376			17	8	22	10			17	8	21	10
400	B2	427			22	9	29	11			22	9	26	11
450	B2	478			26	10	34	12			26	10	31	12
500	B2	530			31	11	41	13			31	11	38	13
550	-	550	29	10	34	11	45	14	33	11	34	11	41	14
600	B1	616	36	11	42	13	55	16	41	12	42	13	51	16
650	-	650	39	11	46	13	61	17	45	13	46	13	56	16
700	B1	718	47	12	56	15	74	18	53	14	55	14	67	18
750	-	752	51	13	61	15	81	19	58	14	60	15	73	18
800	B1	820	60	14	71	16	96	20	68	16	71	16	86	20
860	-	860	65	14	78	17	105	21	74	16	78	17	95	21
900	B1	924	74	15	89	18	121	23	85	17	89	18	109	22
960	-	960	80	16	96	19	130	24	91	18	95	18	117	23
1000	B1	1026	93	17	111	20	150	26	106	19	110	20	135	25
1100	-	1099	105	18	126	22	171	28	120	21	126	22	154	27

The standard pipe lengths are 3 and 6 m. Other lengths are available on request.
Other stiffness classes are available on request.

Amiblu Holding GmbH | Pischeldorfer Str. 128 | 9020 Klagenfurt | Austria | +43 463 482424 | www.amiblu.com | info@amiblu.com
© Amiblu Holding GmbH. Figures may slightly vary due to manufacturing tolerances. Amiblu does not accept any liability for errors, omissions, and subsequent changes to technical data.
Publication: 01/2020

Pressure Pipe PN 16/20

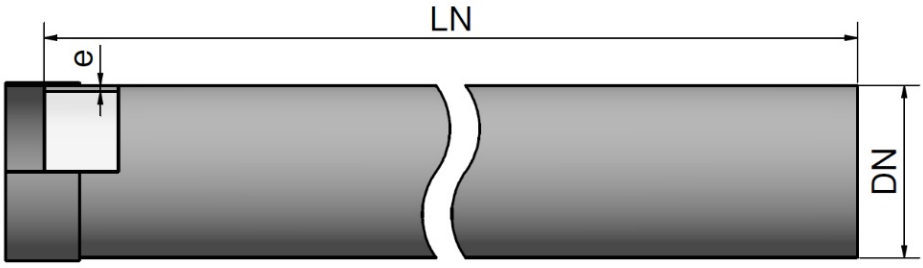

Portfolio as sold by Amiblu. For the full range of the Hobas technology, visit www.hobas.com.

			PN 16						PN 20					
			SN 5000		SN 10000		SN 20000		SN 5000		SN 10000		SN 20000	
DN	DS	d_e [mm]	m [kg/m]	e [mm]	m [kg/m]	e [mm]	m [kg/m]	e [mm]	m [kg/m]	e [mm]	m [kg/m]	e [mm]	m [kg/m]	e [mm]
1200	B1	1229	129	20	176	26	213	31	148	23	155	24	191	30
1280	-	1280	140	20	191	27	230	32	160	24	168	25	206	31
1400	B1	1434	172	23	238	30	287	36	198	26	208	28	257	35
1500	-	1499	209	27	227	29	304	37	241	31	241	31	279	36
1535	-	1535	221	28	239	30	323	38	254	32	254	32	293	37
1600	B1	1638	250	29	270	32	366	41	287	34	287	34	332	40
1720	-	1720	274	31	297	33	402	43	315	36	315	36	365	42
1800	B1	1842	312	33	339	36	459	46	359	38	359	38	417	45
1940	-	1937	343	34	373	38	507	48						
2000	B1	2047	381	36	415	40	565	51						
2160	-	2160	422	38	460	42	627	53						
2200	B1	2250	456	40	498	43	679	56						
2400	-	2400	518	42	566	46	773	60						
2453	-	2453	540	43	591	47	806	61						

The standard pipe lengths are 3 and 6 m. Other lengths are available on request.
Other stiffness classes are available on request.

Amiblu Holding GmbH | Pischeldorfer Str. 128 | 9020 Klagenfurt | Austria | +43 463 482424 | www.amiblu.com | info@amiblu.com
© Amiblu Holding GmbH. Figures may slightly vary due to manufacturing tolerances. Amiblu does not accept any liability for errors, omissions, and subsequent changes to technical data.
Publication: 01/2020

Joints and Couplings

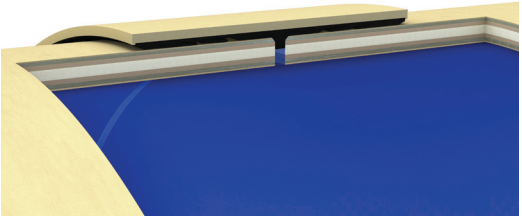

Hobas filament wound coupling (FWC)

Diameter range (DN): 200 - 2555 mm
Pressure range (PN): up to 24 bar
Angular deflection: up to 3°

* The degree of angular deflection depends on the pipe diameter. Please contact Amiblu for further information.

Field joints for pressure & gravity applications

Laminated field joints are available in restrained and unrestrained designs designs. Amiblu provides the necessary instructions or skilled personnel for butt-wrap joining in pressure and non-pressure applications. Technologies developed by Amiblu provide faster and more cost-efficient installations.

Mechanical couplings

Amiblu pipes can be joined using mechanical steel couplings such as tangential bolt couplings or axial bolt couplings.

Wall couplings

The wall coupling is used for connecting pipes to concrete shafts and walls. Wall couplings are sanded for improved stability in concrete shafts. Wall couplings can be delivered with pipe ring, and optionally with sealing tape. Lengths can be selected as required in consideration of the pipe joint data.

Amiblu flanges

Amiblu manufactures and sells flanges in various designs and according to different standards and requirements. When connecting two GRP flanges, the standard bolt pattern to which flanges are manufactured is EN 1092. Other pattern of drilling such as according to AWWA, ANSI, DIN, and JIS can be supplied.

Amiblu Holding GmbH | Pischeldorfer Str. 128 | 9020 Klagenfurt | Austria | +43 463 482424 | www.amiblu.com | info@amiblu.com
© Amiblu Holding GmbH. Figures may slightly vary due to manufacturing tolerances. Amiblu does not accept any liability for errors, omissions, and subsequent changes to technical data.

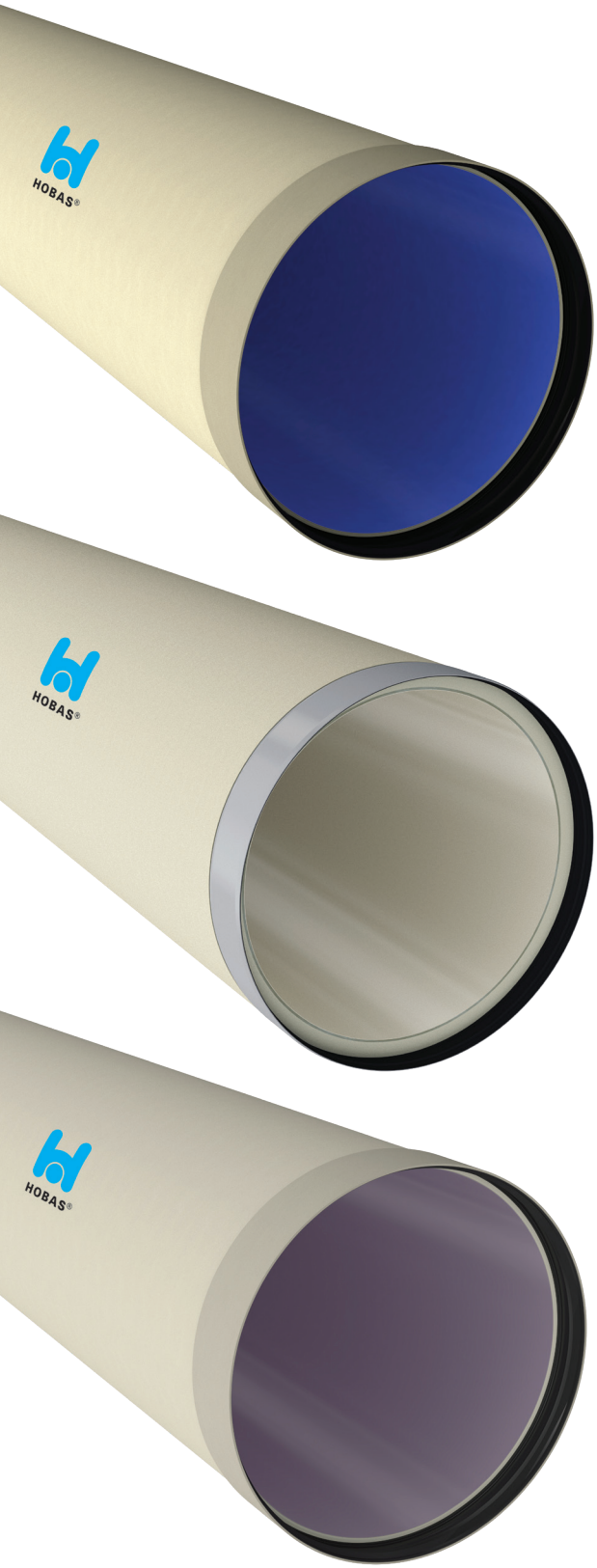

Amiblu offers a broad portfolio of centrifugally cast Hobas GRP pipe systems for various applications and installation methods, e.g. jacking pipes, relining pipes, special pipes with highly durable inner liner, and many more. For the complete range of offered products, please visit www.amiblu.com.

Amiblu Holding GmbH | Pischeldorfer Str. 128 | 9020 Klagenfurt | Austria | +43 463 482424 | www.amiblu.com | info@amiblu.com
© Amiblu Holding GmbH. Figures may slightly vary due to manufacturing tolerances. Amiblu does not accept any liability for errors, omissions, and subsequent changes to technical data.

Segmented Elbow PN 6

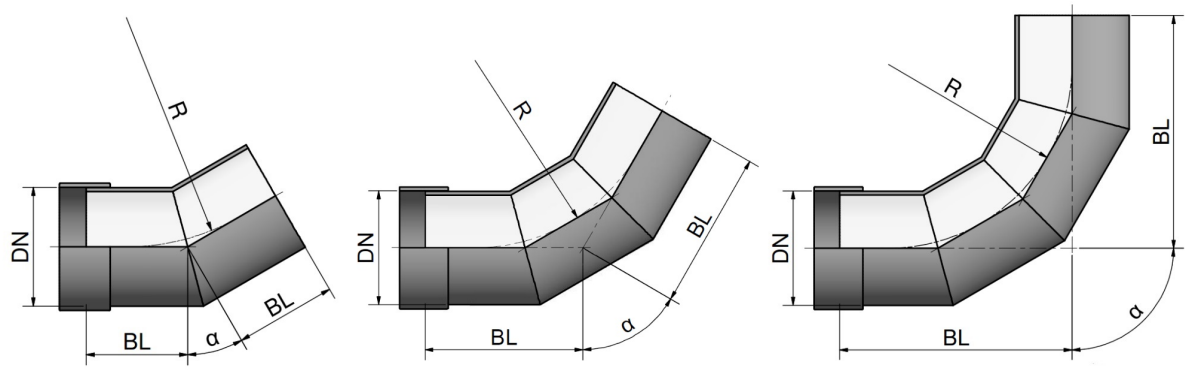

Angle α*:		11.25°		15°		22.5°		30°		45°		60°		90°	
Segments:		2		2		2		2		3		3		4	
DN	d_e [mm]	R [mm]	BL [mm]	R [mm]	BL [mm]	R [mm]	BL [mm]	R [mm]	BL [mm]	R [mm]	BL [mm]	R [mm]	BL [mm]	R [mm]	BL [mm]
200	220	400	300	400	300	400	300	400	300	500	400	400	400	400	550
250	272	430	300	430	300	430	300	430	300	550	400	450	425	450	600
300	324	450	300	450	300	450	300	450	300	550	400	450	450	450	650
350	376	525	325	525	325	525	325	525	325	600	425	525	500	525	700
400	427	600	375	675	375	675	375	675	375	700	500	675	575	675	850
450	478	675	375	675	375	675	375	675	375	700	500	675	575	675	850
500	530	750	400	750	400	750	400	750	400	750	525	750	625	750	950
550	550	825	450	825	450	825	450	825	450	825	600	825	650	825	1000
600	616	900	450	900	450	900	450	900	450	900	600	900	700	900	1075
650	650	975	475	975	475	975	475	975	475	1000	650	975	750	975	1100
700	718	1050	475	1050	475	1050	475	1050	475	1050	650	1050	775	1050	1200
750	752	1125	500	1125	500	1125	500	1125	500	1125	700	1225	800	1225	1300
800	820	1200	525	1200	525	1200	525	1200	525	1200	700	1200	850	1200	1350
860	860	1290	550	1290	550	1290	550	1290	550	1290	725	1290	875	1290	1400
900	924	1350	550	1350	550	1350	550	1350	550	1350	725	1350	875	1350	1400
960	960	1440	575	1440	575	1440	575	1440	575	1440	750	1440	900	1440	1475
1000	1026	1270	575	1270	575	1270	575	1270	575	1270	750	1270	925	1270	1475
1100	1099	1320	600	1320	600	1320	600	1320	600	1320	825	1320	1025	1320	1600
1200	1229	1370	600	1370	600	1370	600	1370	600	1370	825	1370	1025	1370	1600
1280	1280	1400	650	1400	650	1400	650	1400	650	1400	850	1400	1050	1400	1650

* For intermediate sizes, the data of the respective next higher standard class apply.
Sizes can be adapted to meet transport requirements. For project-related dimensions, please contact Amiblu.

Amiblu Holding GmbH | Pischeldorfer Str. 128 | 9020 Klagenfurt | Austria | +43 463 482424 | www.amiblu.com | info@amiblu.com
© Amiblu Holding GmbH. Figures may slightly vary due to manufacturing tolerances. Amiblu does not accept any liability for errors, omissions, and subsequent changes to technical data.
Publication: 01/2020

Segmented Elbow PN 6

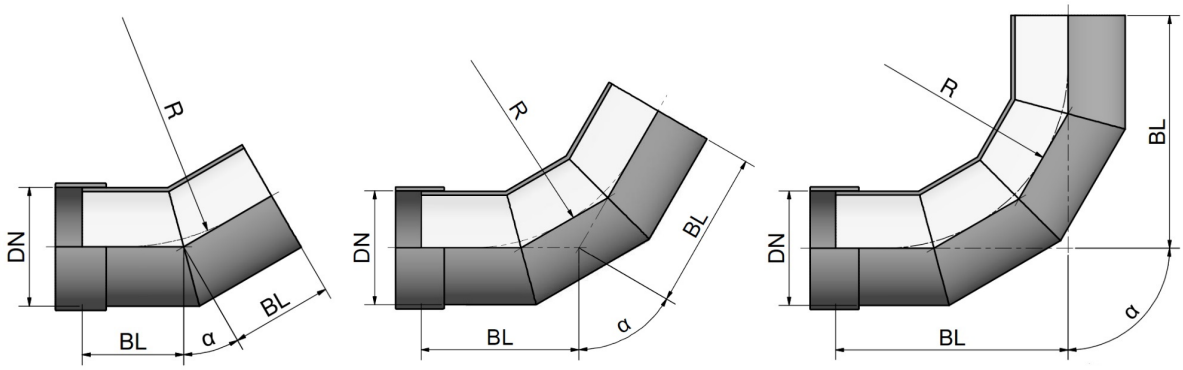

Angle α*:		11.25°		15°		22.5°		30°		45°		60°		90°	
Segments:		2		2		2		2		3		3		4	
DN	d_e [mm]	R [mm]	BL [mm]	R [mm]	BL [mm]	R [mm]	BL [mm]	R [mm]	BL [mm]	R [mm]	BL [mm]	R [mm]	BL [mm]	R [mm]	BL [mm]
1400	1434	1550	675	1550	675	1550	675	1550	675	1550	900	1550	1100	1550	1700
1500	1499	1600	800	1600	800	1600	800	1600	800	1600	1100	1600	1300	1600	2000
1535	1535	1650	800	1650	800	1650	800	1650	800	1650	1100	1650	1300	1650	2000
1600	1638	1700	800	1700	800	1700	800	1700	800	1700	1100	1700	1300	1700	2000
1720	1720	1800	800	1800	800	1800	800	1800	800	1800	1200	1800	1400	1800	2200
1800	1842	1950	850	1950	850	1950	850	1950	850	1950	1200	1950	1400	1950	2200
1940	1937	2000	850	2000	850	2000	850	2000	850	2000	1300	2000	1500	2000	2200
2000	2047	2100	900	2100	900	2100	900	2100	900	2100	1300	2100	1500	2100	2400
2160	2160	2170	900	2170	900	2170	900	2170	900	2170	1300	2170	1500	2170	2400
2200	2250	2280	950	2280	950	2280	950	2280	950	2280	1400	2280	1600	2280	2600
2400	2400	2470	1000	2470	1000	2470	1000	2470	1000	2470	1500	2470	1700	2470	2600
2453	2453	2500	1000	2500	1000	2500	1000	2500	1000	2500	1500	2500	1700	2500	2600
2555	2555	2600	1000	2600	1000	2600	1000	2600	1000	2600	1500	2600	1700	2600	2700

* For intermediate sizes, the data of the respective next higher standard class apply.
Sizes can be adapted to meet transport requirements. For project-related dimensions, please contact Amiblu.

Amiblu Holding GmbH | Pischeldorfer Str. 128 | 9020 Klagenfurt | Austria | +43 463 482424 | www.amiblu.com | info@amiblu.com
© Amiblu Holding GmbH. Figures may slightly vary due to manufacturing tolerances. Amiblu does not accept any liability for errors, omissions, and subsequent changes to technical data.
Publication: 01/2020

Segmented Elbow PN 10

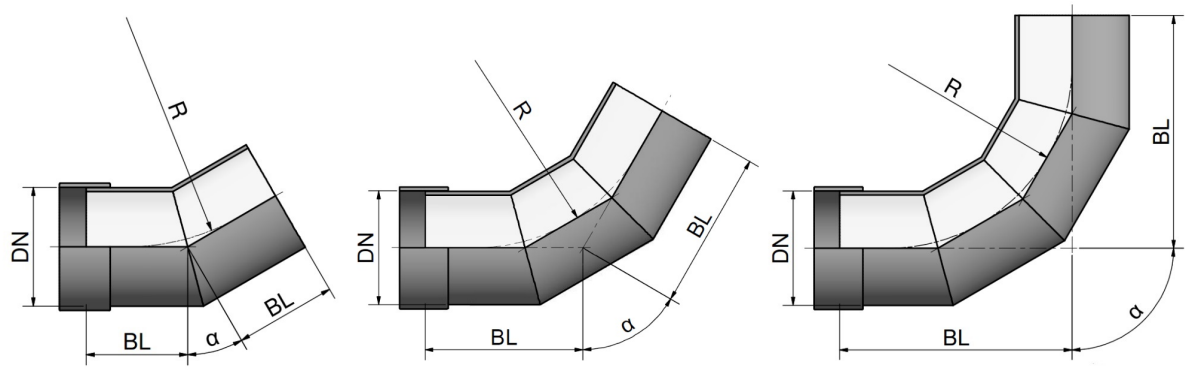

Angle α*:		11.25°		15°		22.5°		30°		45°		60°		90°	
Segments:		2		2		2		2		3		3		4	
DN	d_e [mm]	R [mm]	BL [mm]	R [mm]	BL [mm]	R [mm]	BL [mm]	R [mm]	BL [mm]	R [mm]	BL [mm]	R [mm]	BL [mm]	R [mm]	BL [mm]
200	220	400	300	400	300	400	300	400	300	500	400	400	400	400	550
250	272	430	300	430	300	430	300	430	300	550	400	450	425	450	600
300	324	450	300	450	300	450	300	450	300	550	400	450	450	450	650
350	376	525	325	525	325	525	325	525	325	600	425	525	500	525	700
400	427	675	375	675	375	675	375	675	375	700	500	675	575	675	850
450	478	675	375	675	375	675	375	675	375	700	500	675	575	675	850
500	530	750	400	750	400	750	400	750	400	750	525	750	625	750	950
550	550	825	450	825	450	825	450	825	450	825	600	825	650	825	1000
600	616	900	450	900	450	900	450	900	450	900	600	900	700	900	1075
650	650	975	475	975	475	975	475	975	475	1000	650	975	750	975	1100
700	718	1050	475	1050	475	1050	475	1050	475	1050	650	1050	775	1050	1200
750	752	1125	500	1125	500	1125	500	1125	500	1125	700	1225	800	1225	1300
800	820	1200	525	1200	525	1200	525	1200	525	1200	700	1200	850	1200	1350
860	860	1290	550	1290	550	1290	550	1290	550	1290	725	1290	875	1290	1400
900	924	1350	550	1350	550	1350	550	1350	550	1350	725	1350	875	1350	1500
960	960	1440	575	1440	575	1440	575	1440	575	1440	750	1440	900	1440	1550
1000	1026	1270	575	1270	575	1270	575	1270	575	1360	900	1270	925	1270	1450
1100	1099	1320	600	1320	600	1320	600	1320	600	1520	900	1320	1025	1320	1600
1200	1229	1370	600	1370	600	1370	600	1370	600	1640	900	1400	1025	1500	1650
1280	1280	1400	650	1400	650	1400	650	1400	650	1660	900	1500	1050	1600	1750

* For intermediate sizes, the data of the respective next higher standard class apply.
Sizes can be adapted to meet transport requirements. For project-related dimensions, please contact Amiblu.

Amiblu Holding GmbH | Pischeldorfer Str. 128 | 9020 Klagenfurt | Austria | +43 463 482424 | www.amiblu.com | info@amiblu.com
© Amiblu Holding GmbH. Figures may slightly vary due to manufacturing tolerances. Amiblu does not accept any liability for errors, omissions, and subsequent changes to technical data.
Publication: 01/2020

Segmented Elbow PN 10

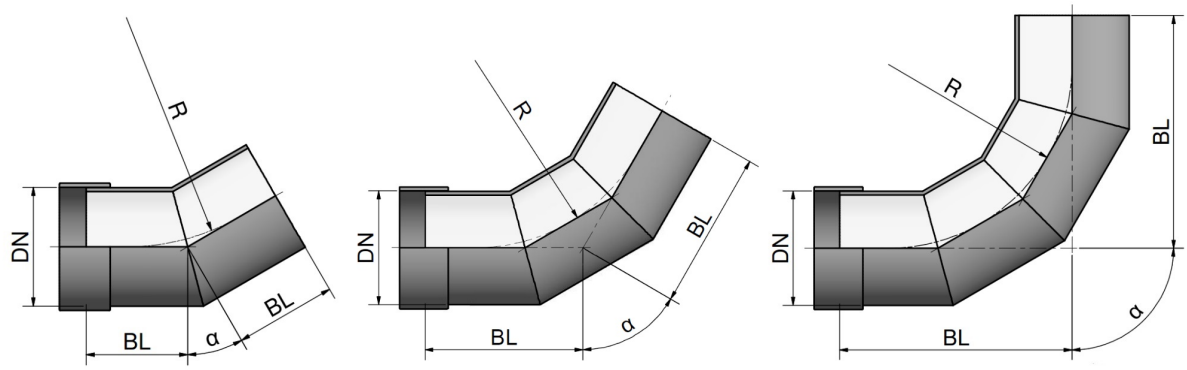

Angle α*:		11.25°		15°		22.5°		30°		45°		60°		90°	
Segments:		2		2		2		2		3		3		4	
DN	d_e [mm]	R [mm]	BL [mm]	R [mm]	BL [mm]	R [mm]	BL [mm]	R [mm]	BL [mm]	R [mm]	BL [mm]	R [mm]	BL [mm]	R [mm]	BL [mm]
1400	1434	1550	675	1550	675	1550	675	1550	675	1870	1000	1700	1200	1800	1950
1500	1499	1600	800	1600	800	1600	800	1600	800	2050	1100	1800	1300	1900	2100
1535	1535	1650	800	1650	800	1650	800	1650	800	2050	1100	1800	1300	1900	2100
1600	1638	1700	800	1700	800	1700	800	1700	800	2170	1100	1950	1300	2000	2200
1720	1720	1800	800	1800	800	1800	800	1800	800	2210	1070	1970	1280	2110	2260
1800	1842	1950	850	1950	850	1950	850	1950	850	2400	1140	2070	1340	2260	2410
1940	1937	2000	850	2000	850	2000	850	2000	850	2500	1190	2210	1420	2310	2460
2000	2047	2100	900	2100	900	2100	900	2100	900	2680	1260	2370	1510	2420	2570
2160	2160	2170	900	2170	900	2170	900	2170	900	2870	1340	2480	1580	2570	2720
2200	2250	2280	950	2280	950	2280	950	2280	950	2910	1360	2620	1660	2660	2800
2400	2400	2470	1000	2470	1000	2470	1000	2470	1000	3060	1420	2730	1720	2830	2970
2453	2453	2500	1000	2500	1000	2500	1000	2500	1000	3220	1480	2760	1740	2950	3090
2555	2555	2600	1000	2600	1000	2600	1000	2600	1000	-	-	-	-	-	-

* For intermediate sizes, the data of the respective next higher standard class apply.

Sizes can be adapted to meet transport requirements. For project-related dimensions, please contact Amiblu.

Amiblu Holding GmbH | Pischeldorfer Str. 128 | 9020 Klagenfurt | Austria | +43 463 482424 | www.amiblu.com | info@amiblu.com

© Amiblu Holding GmbH. Figures may slightly vary due to manufacturing tolerances. Amiblu does not accept any liability for errors, omissions, and subsequent changes to technical data.

Publication: 01/2020

T-Piece Concentric PN 6

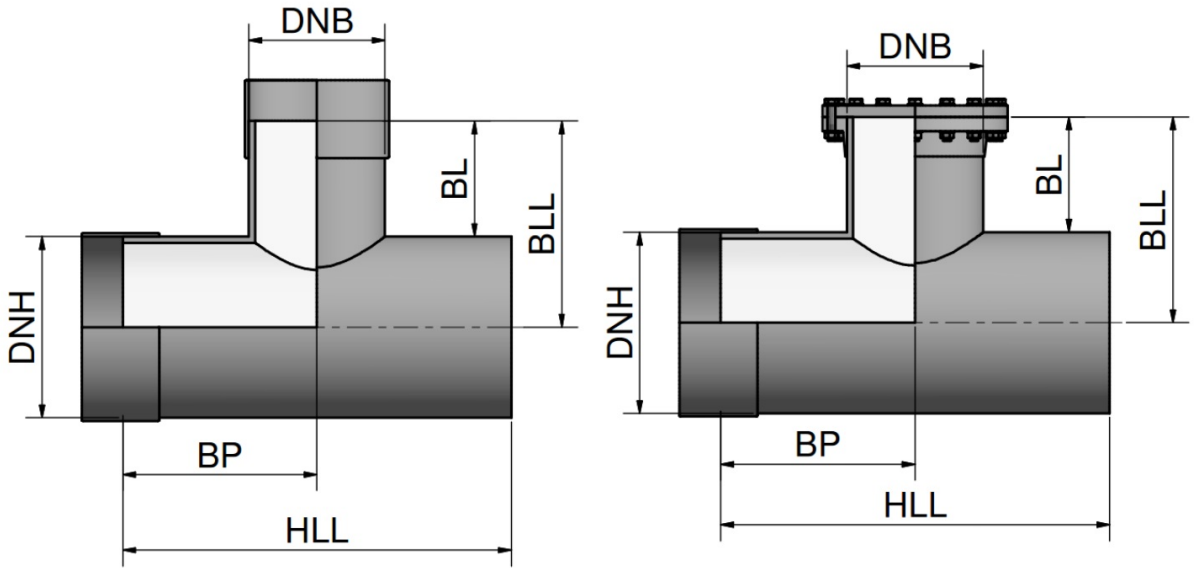

DN_H	d_{eH} [mm]	DN_B	d_{eB} [mm]	HLL [mm]	BL [mm]	BLL [mm]	BP [mm]
200	220	200	220	1000	400	510	500
250	272	200	220	1000	400	536	500
		250	272	1000	400	536	500
300	324	200	220	1000	400	562	500
		250	272	1000	400	562	500
		300	324	1000	400	562	500
350	376	200	220	1000	400	588	500
		250	272	1000	400	588	500
		300	324	1000	400	588	500
		350	376	1500	400	588	750
400	427	200	220	1000	400	614	500
		250	272	1000	400	614	500
		300	324	1000	400	614	500
		350	376	1500	400	614	750
		400	427	1500	400	614	750

Table contains selected branch sizes. For our full portfolio, please visit www.amiblu.com/amiblu-products.
Sizes can be adapted to meet transport requirements. For project-related dimensions, please contact Amiblu.

Amiblu Holding GmbH | Pischeldorfer Str. 128 | 9020 Klagenfurt | Austria | +43 463 482424 | www.amiblu.com | info@amiblu.com
© Amiblu Holding GmbH. Figures may slightly vary due to manufacturing tolerances. Amiblu does not accept any liability for errors, omissions, and subsequent changes to technical data.
Publication: 01/2020

T-Piece Concentric PN 6

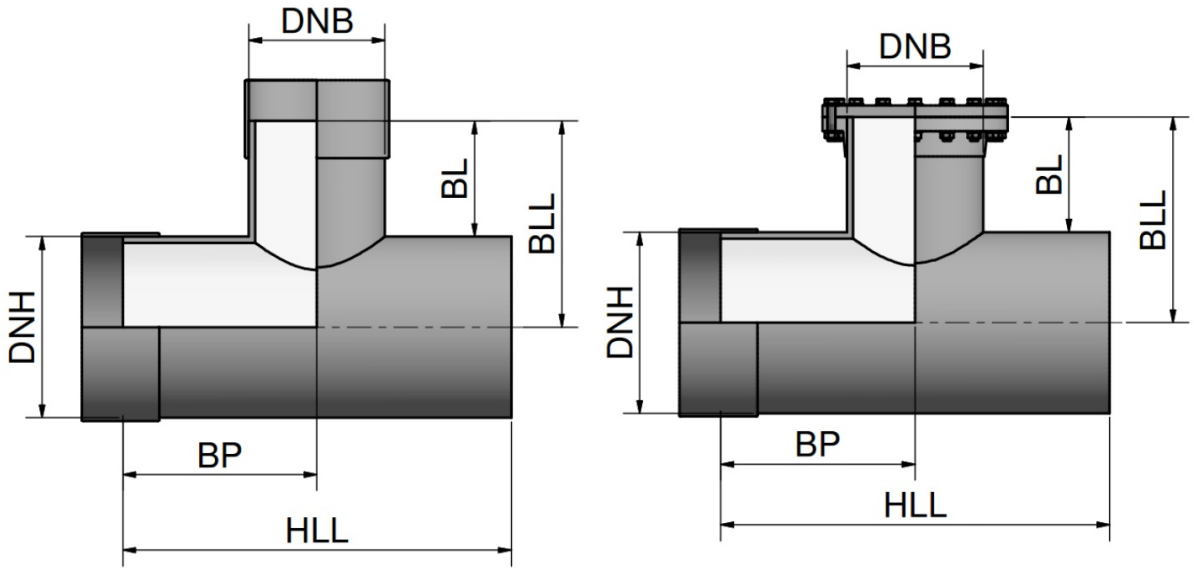

DN_H	d_{eH} [mm]	DN_B	d_{eB} [mm]	HLL [mm]	BL [mm]	BLL [mm]	BP [mm]
450	478	200	220	1000	400	639	500
		300	324	1500	400	639	750
		350	376	1500	400	639	750
		400	427	1500	400	639	750
		450	478	1500	450	689	750
500	530	200	220	1000	400	665	500
		300	324	1500	400	665	750
		400	427	1500	400	665	750
		450	478	1500	450	715	750
		500	530	1500	500	765	750
550	550	200	220	1000	400	675	500
		300	324	1500	400	675	750
		400	427	1500	400	675	750
		450	478	1500	450	725	750
		550	550	1500	500	775	750
600	616	200	220	1000	400	708	500
		350	376	1500	400	708	750
		450	478	1500	450	758	750
		500	530	1500	500	808	750
		600	616	1500	550	858	750

Table contains selected branch sizes. For our full portfolio, please visit www.amiblu.com/amiblu-products.
Sizes can be adapted to meet transport requirements. For project-related dimensions, please contact Amiblu.

Amiblu Holding GmbH | Pischeldorfer Str. 128 | 9020 Klagenfurt | Austria | +43 463 482424 | www.amiblu.com | info@amiblu.com
© Amiblu Holding GmbH. Figures may slightly vary due to manufacturing tolerances. Amiblu does not accept any liability for errors, omissions, and subsequent changes to technical data.
Publication: 01/2020

T-Piece Concentric PN 6

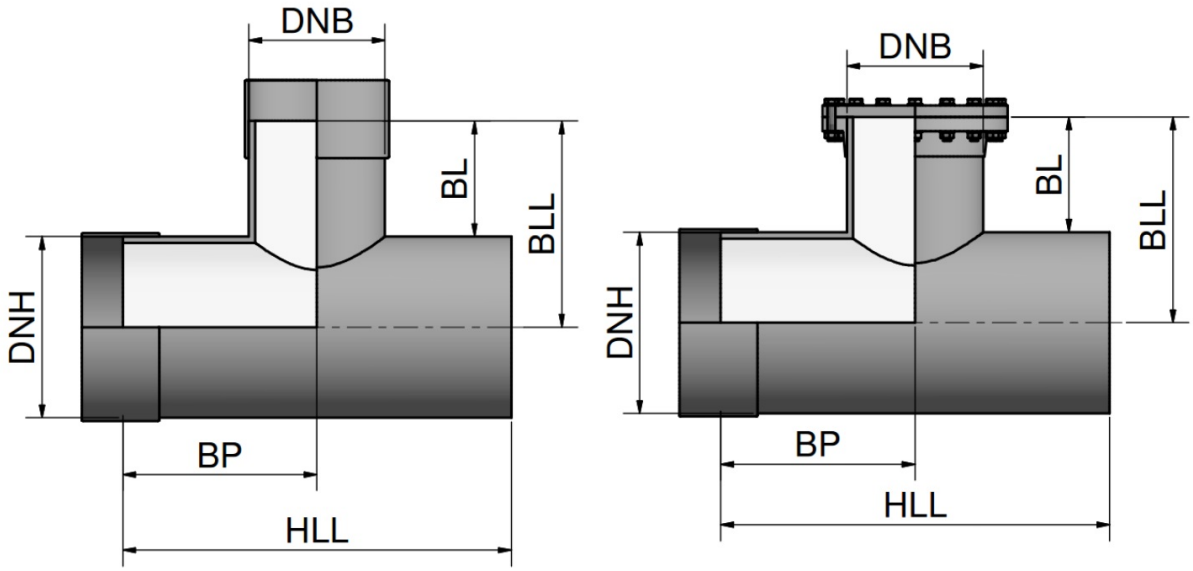

DN_H	d_{eH} [mm]	DN_B	d_{eB} [mm]	HLL [mm]	BL [mm]	BLL [mm]	BP [mm]
650	650	200	220	1000	400	725	500
		350	376	1500	400	725	750
		450	478	1500	450	775	750
		550	550	1500	500	825	750
		650	650	2000	550	875	1000
700	718	200	220	1000	400	759	500
		350	376	1500	400	759	750
		500	530	1500	500	859	750
		600	616	2000	550	909	1000
		700	718	2000	550	909	1000
750	752	200	220	1000	400	776	500
		350	376	1500	400	776	750
		500	530	1500	500	876	750
		600	616	2000	550	926	1000
		750	752	2000	650	1026	1000
800	820	200	220	1000	400	810	500
		400	427	1500	400	810	750
		550	550	2000	500	910	1000
		650	650	2000	550	960	1000
		800	820	2000	700	1110	1000

Table contains selected branch sizes. For our full portfolio, please visit www.amiblu.com/amiblu-products.
Sizes can be adapted to meet transport requirements. For project-related dimensions, please contact Amiblu.

Amiblu Holding GmbH | Pischeldorfer Str. 128 | 9020 Klagenfurt | Austria | +43 463 482424 | www.amiblu.com | info@amiblu.com
© Amiblu Holding GmbH. Figures may slightly vary due to manufacturing tolerances. Amiblu does not accept any liability for errors, omissions, and subsequent changes to technical data.
Publication: 01/2020

T-Piece Concentric PN 6

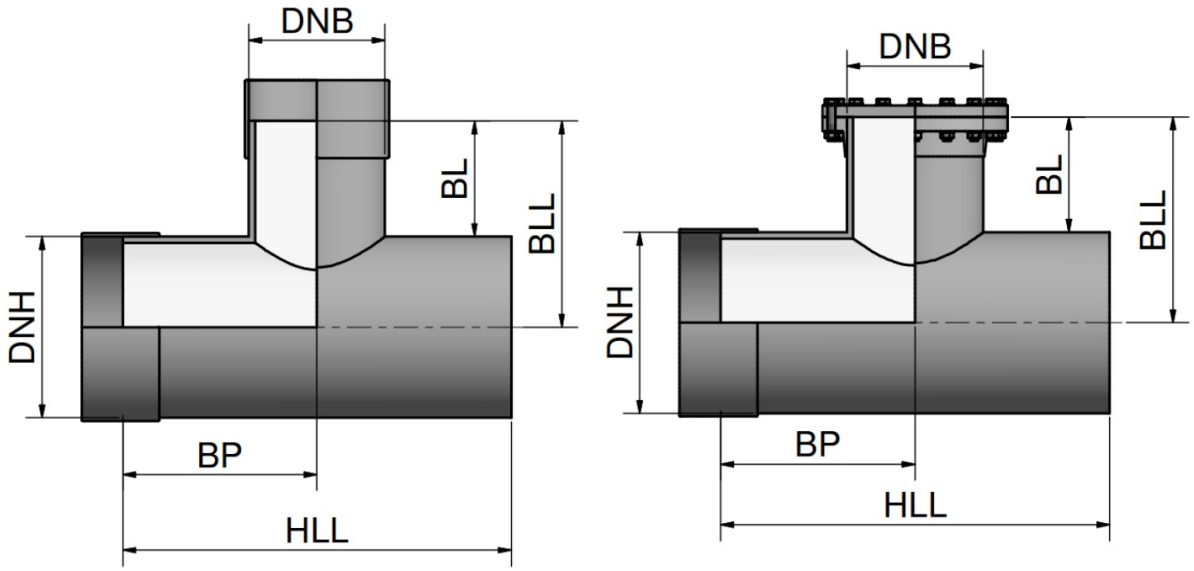

DN_H	d_{eH} [mm]	DN_B	d_{eB} [mm]	HLL [mm]	BL [mm]	BLL [mm]	BP [mm]
860	860	200	220	1500	400	830	750
		400	427	1500	400	830	750
		550	550	2000	500	930	1000
		700	718	2000	550	980	1000
		860	860	2000	700	1130	1000
900	924	200	220	1500	400	862	750
		400	427	1500	400	862	750
		600	616	2000	550	1012	1000
		750	752	2000	650	1112	1000
		900	924	2500	800	1262	1250
960	960	200	220	1500	400	880	750
		400	427	1500	400	880	750
		600	616	2000	550	1030	1000
		750	752	2000	650	1130	1000
		960	960	2500	800	1280	1250
1000	1026	200	220	1500	400	913	750
		450	478	2000	450	963	1000
		650	650	2000	550	1063	1000
		800	820	2000	700	1213	1000
		1000	1026	2500	850	1363	1250

Table contains selected branch sizes. For our full portfolio, please visit www.amiblu.com/amiblu-products.
Sizes can be adapted to meet transport requirements. For project-related dimensions, please contact Amiblu.

Amiblu Holding GmbH | Pischeldorfer Str. 128 | 9020 Klagenfurt | Austria | +43 463 482424 | www.amiblu.com | info@amiblu.com
© Amiblu Holding GmbH. Figures may slightly vary due to manufacturing tolerances. Amiblu does not accept any liability for errors, omissions, and subsequent changes to technical data.
Publication: 01/2020

T-Piece Concentric PN 6

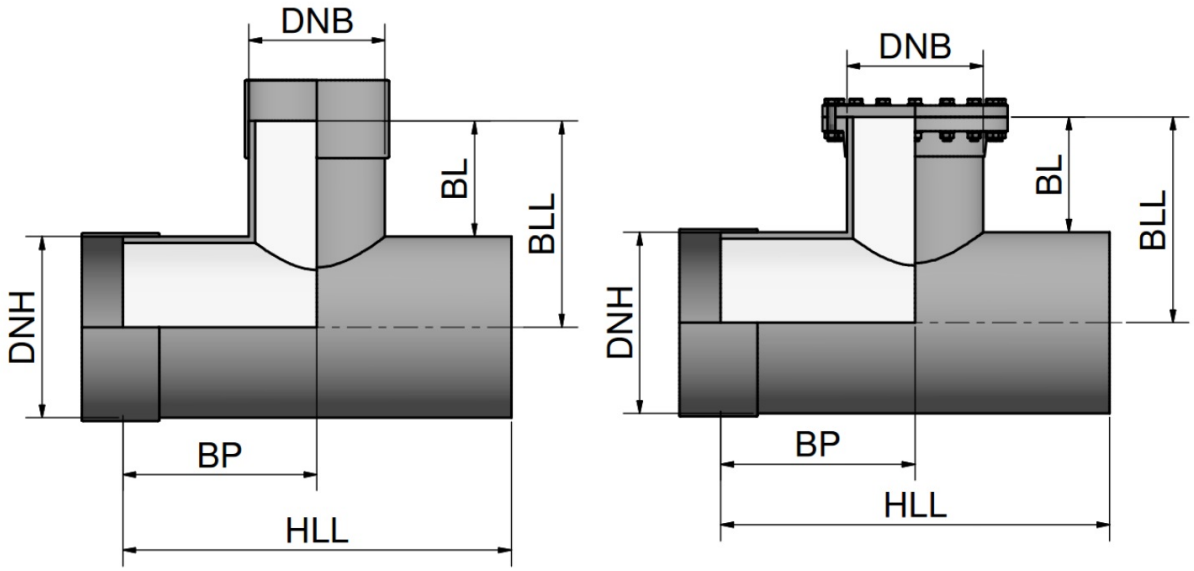

DN_H	d_{eH} [mm]	DN_B	d_{eB} [mm]	HLL [mm]	BL [mm]	BLL [mm]	BP [mm]
1100	1099	200	220	1500	400	950	750
		450	478	2000	450	1000	1000
		650	650	2000	550	1100	1000
		860	860	2500	700	1250	1250
		1100	1099	2500	900	1450	1250
1200	1229	200	220	1500	400	1015	750
		450	478	2000	450	1065	1000
		700	718	2000	550	1165	1000
		900	924	2500	800	1415	1250
		1200	1229	3000	950	1565	1500
1280	1280	200	220	1500	400	1040	750
		450	478	2000	450	1090	1000
		700	718	2000	550	1190	1000
		900	924	2500	800	1440	1250
		1280	1280	3000	1000	1640	1500
1400	1434	200	220	1500	400	1117	750
		500	530	2000	500	1217	1000
		750	752	2500	650	1367	1250
		960	960	2500	800	1517	1250
		1400	1434	3500	1100	1817	1750

Table contains selected branch sizes. For our full portfolio, please visit www.amiblu.com/amiblu-products.
Sizes can be adapted to meet transport requirements. For project-related dimensions, please contact Amiblu.

Amiblu Holding GmbH | Pischeldorfer Str. 128 | 9020 Klagenfurt | Austria | +43 463 482424 | www.amiblu.com | info@amiblu.com
© Amiblu Holding GmbH. Figures may slightly vary due to manufacturing tolerances. Amiblu does not accept any liability for errors, omissions, and subsequent changes to technical data.
Publication: 01/2020

T-Piece Concentric PN 6

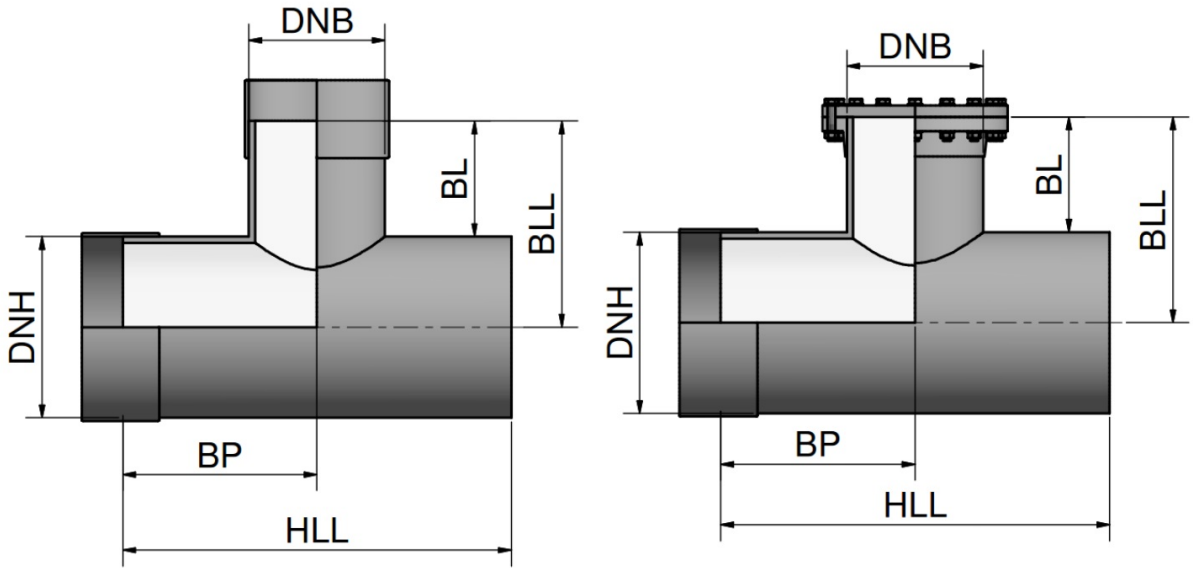

DN_H	d_{eH} [mm]	DN_B	d_{eB} [mm]	HLL [mm]	BL [mm]	BLL [mm]	BP [mm]
1500	1499	200	220	1500	400	1150	750
		500	530	2000	500	1250	1000
		750	752	2500	650	1400	1250
		1000	1026	2500	850	1600	1250
		1500	1499	3500	1200	1950	1750
1535	1535	200	220	1500	400	1168	750
		500	530	2000	500	1268	1000
		800	820	2500	700	1468	1250
		1100	1099	3000	900	1668	1500
		1535	1535	3500	1200	1968	1750
1600	1638	200	220	1500	400	1219	750
		500	530	2000	500	1319	1000
		800	820	2500	700	1519	1250
		1100	1099	3000	900	1719	1500
		1600	1638	3500	1300	2119	1750
1720	1720	200	220	1500	400	1260	750
		500	530	2000	500	1360	1000
		800	820	2500	700	1560	1250
		1100	1099	3000	900	1760	1500
		1535	1535	3500	1200	2060	1750

Table contains selected branch sizes. For our full portfolio, please visit www.amiblu.com/amiblu-products.
Sizes can be adapted to meet transport requirements. For project-related dimensions, please contact Amiblu.

Amiblu Holding GmbH | Pischeldorfer Str. 128 | 9020 Klagenfurt | Austria | +43 463 482424 | www.amiblu.com | info@amiblu.com
© Amiblu Holding GmbH. Figures may slightly vary due to manufacturing tolerances. Amiblu does not accept any liability for errors, omissions, and subsequent changes to technical data.
Publication: 01/2020

T-Piece Concentric PN 6

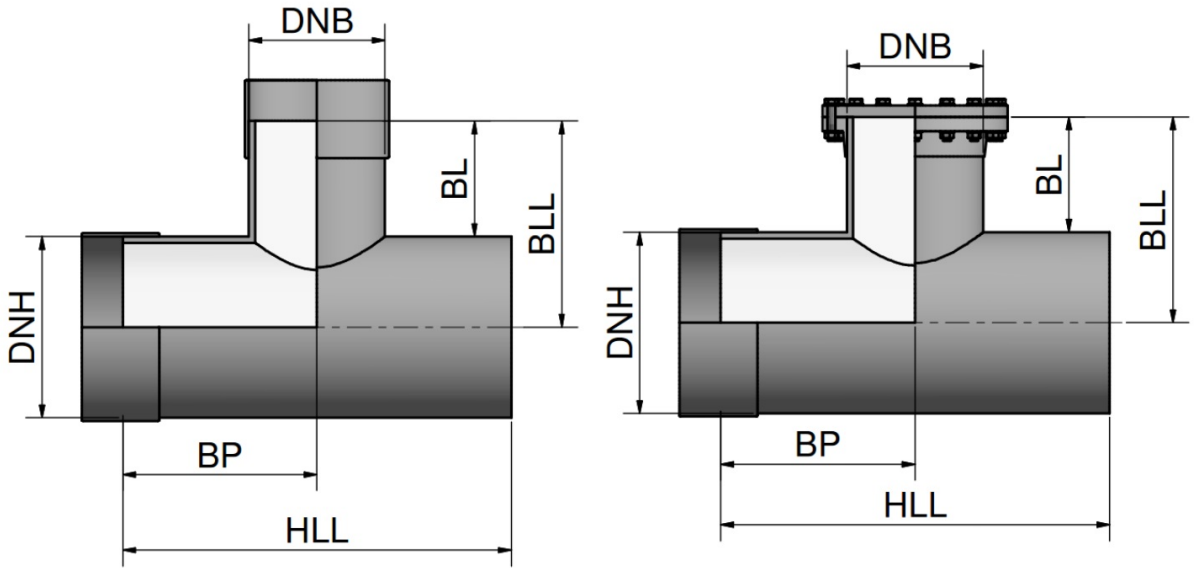

DN_H	d_{eH} [mm]	DN_B	d_{eB} [mm]	HLL [mm]	BL [mm]	BLL [mm]	BP [mm]
1800	1842	200	220	1500	400	1321	750
		500	530	2000	500	1421	1000
		800	820	2500	700	1621	1250
		1100	1099	3000	900	1821	1500
		1600	1638	3500	1300	2221	1750
1940	1937	200	220	1500	400	1369	750
		550	550	2000	500	1469	1000
		860	860	2500	700	1669	1250
		1200	1229	3000	950	1919	1500
		1720	1720	4000	1300	2269	2000
2000	2047	200	220	1500	400	1424	750
		550	550	2000	500	1524	1000
		860	860	2500	700	1724	1250
		1280	1280	3000	1000	2024	1500
		1800	1842	4000	1400	2424	2000
2160	2160	200	220	1500	400	1480	750
		550	550	2500	500	1580	1250
		900	924	3000	800	1880	1500
		1400	1434	3500	1100	2180	1750
		1940	1937	4500	1500	2580	2250

Table contains selected branch sizes. For our full portfolio, please visit www.amiblu.com/amiblu-products.
Sizes can be adapted to meet transport requirements. For project-related dimensions, please contact Amiblu.

Amiblu Holding GmbH | Pischeldorfer Str. 128 | 9020 Klagenfurt | Austria | +43 463 482424 | www.amiblu.com | info@amiblu.com
© Amiblu Holding GmbH. Figures may slightly vary due to manufacturing tolerances. Amiblu does not accept any liability for errors, omissions, and subsequent changes to technical data.
Publication: 01/2020

T-Piece Concentric PN 6

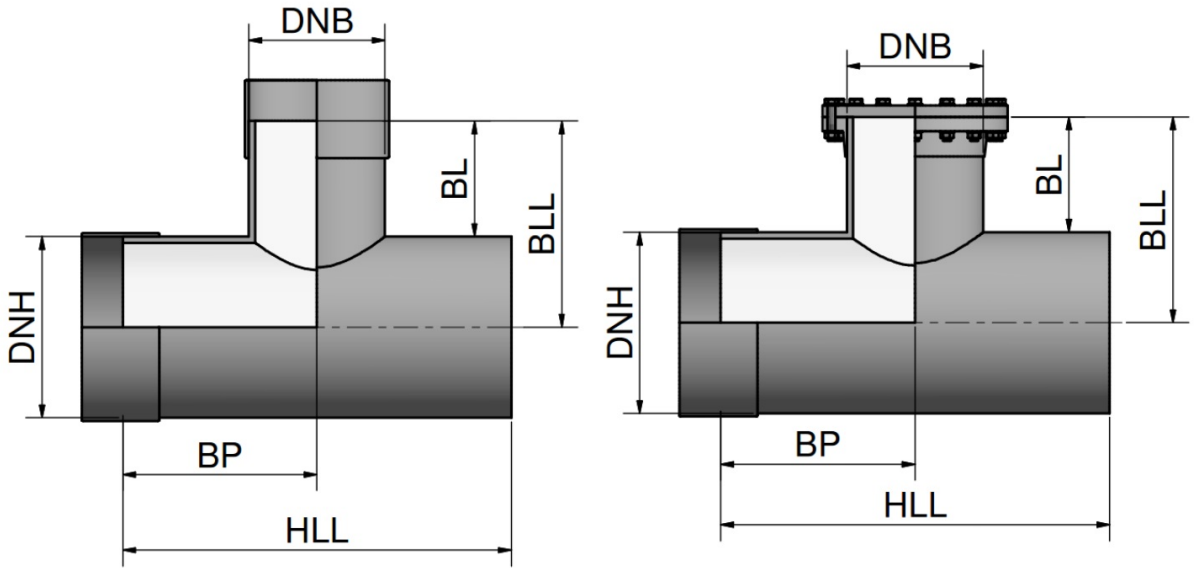

DN_H	d_{eH} [mm]	DN_B	d_{eB} [mm]	HLL [mm]	BL [mm]	BLL [mm]	BP [mm]
2200	2250	200	220	1500	400	1525	750
		500	530	2500	500	1625	1250
		800	820	2500	700	1825	1250
		1100	1099	3000	900	2025	1500
		1600	1638	4000	1300	2425	2000
2400	2400	200	220	1500	400	1600	750
		500	530	2500	500	1700	1250
		800	820	2500	700	1900	1250
		1100	1099	3000	900	2100	1500
		1600	1638	4000	1300	2500	2000
2453	2453	200	220	1500	400	1627	750
		500	530	2500	500	1727	1250
		800	820	3000	700	1927	1500
		1100	1099	3000	900	2127	1500
		1600	1638	4000	1300	2527	2000
2555	2555	200	220	1500	400	1678	750
		500	530	2500	500	1778	1250
		800	820	3000	700	1978	1500
		1100	1099	3000	900	2178	1500
		1600	1638	4000	1300	2578	2000

Table contains selected branch sizes. For our full portfolio, please visit www.amiblu.com/amiblu-products.
Sizes can be adapted to meet transport requirements. For project-related dimensions, please contact Amiblu.

Amiblu Holding GmbH | Pischeldorfer Str. 128 | 9020 Klagenfurt | Austria | +43 463 482424 | www.amiblu.com | info@amiblu.com
© Amiblu Holding GmbH. Figures may slightly vary due to manufacturing tolerances. Amiblu does not accept any liability for errors, omissions, and subsequent changes to technical data.
Publication: 01/2020

T-Piece Concentric PN 10

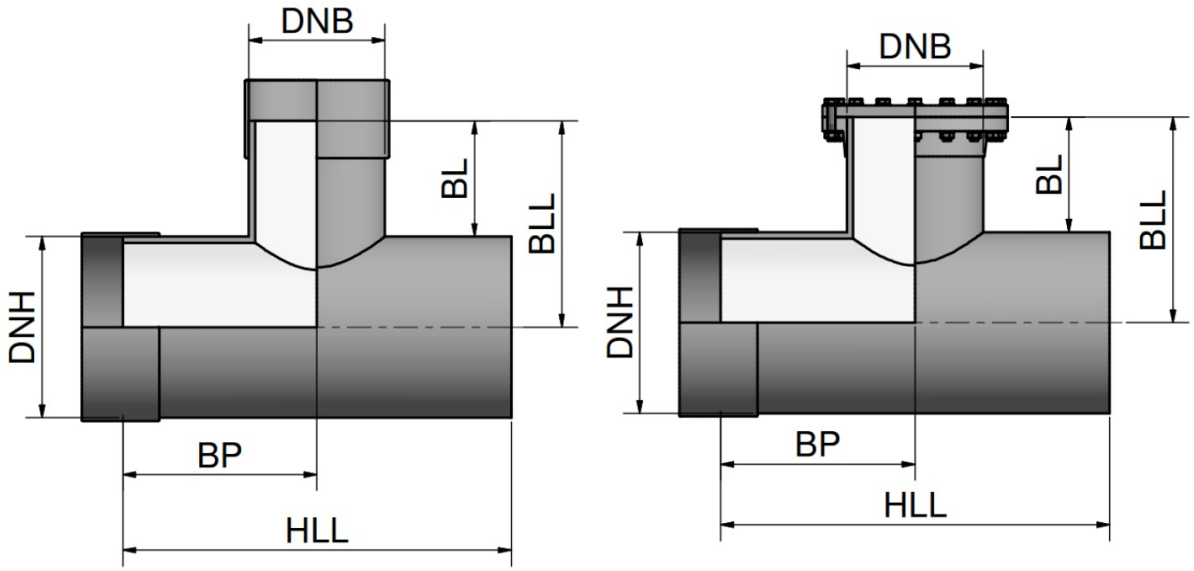

DN_H	d_{eH} [mm]	DN_B	d_{eB} [mm]	HLL [mm]	BL [mm]	BLL [mm]	BP [mm]
200	220	200	220	1000	400	510	500
250	272	200	220	1000	400	536	500
		250	272	1000	400	536	500
300	324	200	220	1000	400	562	500
		250	272	1000	400	562	500
		300	324	1000	400	562	500
350	376	200	220	1000	400	588	500
		250	272	1000	400	588	500
		300	324	1000	400	588	500
		350	376	1500	400	588	750
400	427	200	220	1000	400	614	500
		250	272	1000	400	614	500
		300	324	1000	400	614	500
		350	376	1500	400	614	750
		400	427	1500	400	614	750

Table contains selected branch sizes. For our full portfolio, please visit www.amiblu.com/amiblu-products.
Sizes can be adapted to meet transport requirements. For project-related dimensions, please contact Amiblu.

Amiblu Holding GmbH | Pischeldorfer Str. 128 | 9020 Klagenfurt | Austria | +43 463 482424 | www.amiblu.com | info@amiblu.com
© Amiblu Holding GmbH. Figures may slightly vary due to manufacturing tolerances. Amiblu does not accept any liability for errors, omissions, and subsequent changes to technical data.
Publication: 01/2020

T-Piece Concentric PN 10

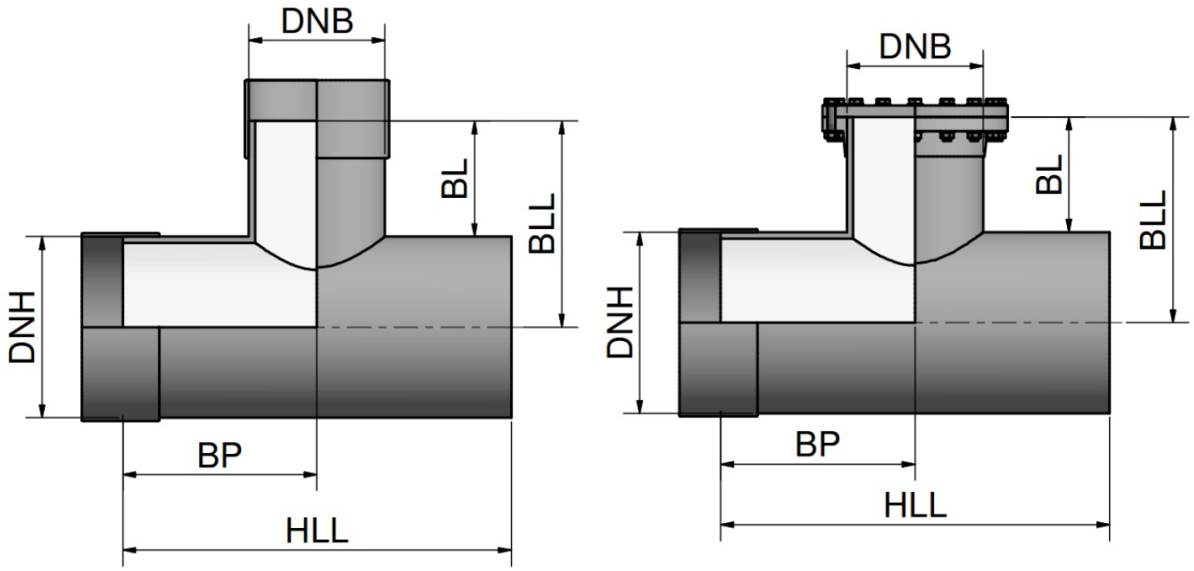

DN_H	d_{eH} [mm]	DN_B	d_{eB} [mm]	HLL [mm]	BL [mm]	BLL [mm]	BP [mm]
450	478	200	220	1000	400	639	500
		300	324	1500	400	639	750
		350	376	1500	400	639	750
		400	427	1500	400	639	750
		450	478	1500	450	689	750
500	530	200	220	1000	400	665	500
		300	324	1500	400	665	750
		400	427	1500	400	665	750
		450	478	1500	450	715	750
		500	530	1500	500	765	750
550	550	200	220	1000	400	675	500
		300	324	1500	400	675	750
		400	427	1500	400	675	750
		450	478	1500	450	725	750
		550	550	1500	500	775	750
600	616	200	220	1000	400	708	500
		350	376	1500	400	708	750
		450	478	1500	450	758	750
		500	530	1500	500	808	750
		600	616	1500	550	858	750

Table contains selected branch sizes. For our full portfolio, please visit www.amiblu.com/amiblu-products.
Sizes can be adapted to meet transport requirements. For project-related dimensions, please contact Amiblu.

Amiblu Holding GmbH | Pischeldorfer Str. 128 | 9020 Klagenfurt | Austria | +43 463 482424 | www.amiblu.com | info@amiblu.com
© Amiblu Holding GmbH. Figures may slightly vary due to manufacturing tolerances. Amiblu does not accept any liability for errors, omissions, and subsequent changes to technical data.
Publication: 01/2020

T-Piece Concentric PN 10

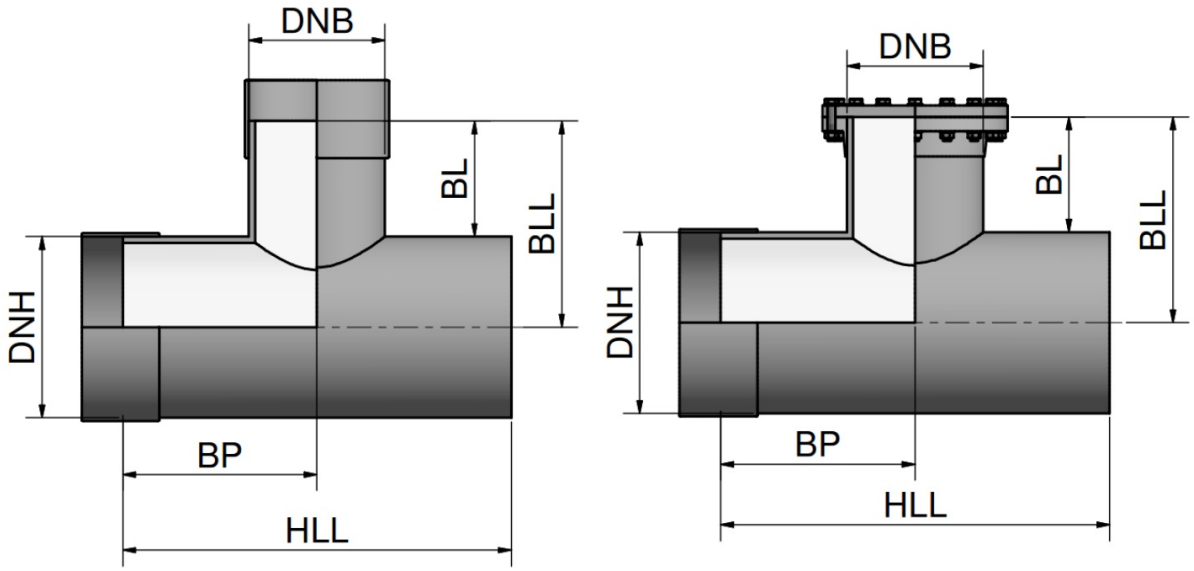

DN_H	d_{eH} [mm]	DN_B	d_{eB} [mm]	HLL [mm]	BL [mm]	BLL [mm]	BP [mm]
650	650	200	220	1000	400	725	500
		350	376	1500	400	725	750
		450	478	1500	450	775	750
		550	550	1500	500	825	750
		650	650	2000	550	875	1000
700	718	200	220	1000	400	759	500
		350	376	1500	400	759	750
		500	530	1500	500	859	750
		600	616	2000	550	909	1000
		700	718	2000	550	909	1000
750	752	200	220	1000	400	776	500
		350	376	1500	400	776	750
		500	530	1500	500	876	750
		600	616	2000	550	926	1000
		750	752	2000	650	1026	1000
800	820	200	220	1000	400	810	500
		400	427	1500	400	810	750
		550	550	2000	500	910	1000
		650	650	2000	550	960	1000
		800	820	2000	700	1110	1000

Table contains selected branch sizes. For our full portfolio, please visit www.amiblu.com/amiblu-products.
Sizes can be adapted to meet transport requirements. For project-related dimensions, please contact Amiblu.

Amiblu Holding GmbH | Pischeldorfer Str. 128 | 9020 Klagenfurt | Austria | +43 463 482424 | www.amiblu.com | info@amiblu.com
© Amiblu Holding GmbH. Figures may slightly vary due to manufacturing tolerances. Amiblu does not accept any liability for errors, omissions, and subsequent changes to technical data.
Publication: 01/2020

T-Piece Concentric PN 10

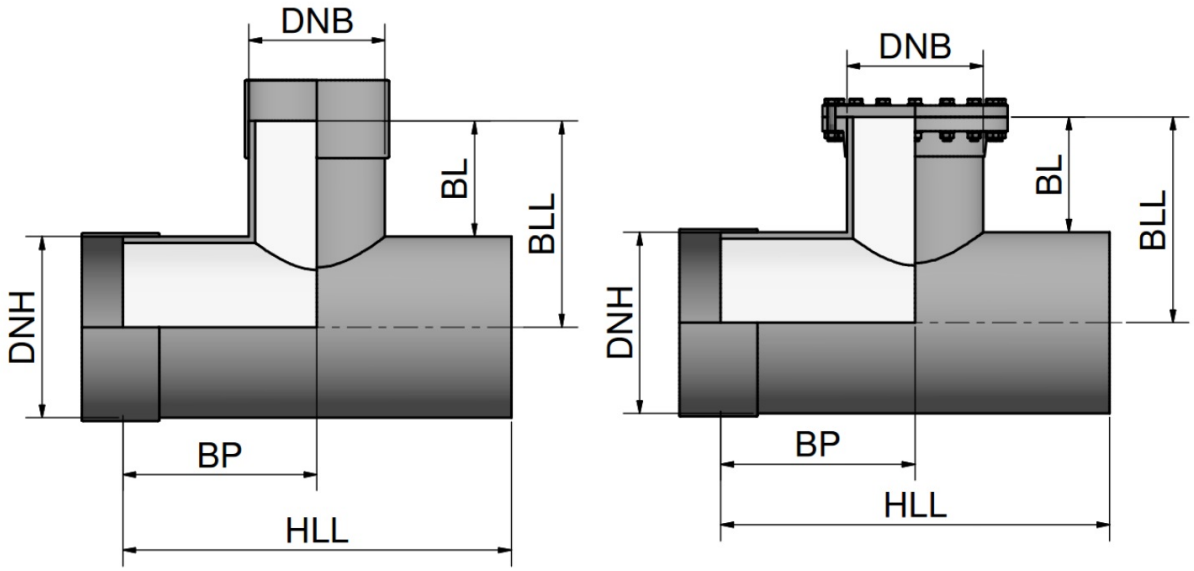

DN_H	d_{eH} [mm]	DN_B	d_{eB} [mm]	HLL [mm]	BL [mm]	BLL [mm]	BP [mm]
860	860	200	220	1500	400	830	750
		400	427	1500	400	830	750
		550	550	2000	500	930	1000
		700	718	2000	550	980	1000
		860	860	2000	700	1130	1000
900	924	200	220	1500	400	862	750
		400	427	1500	400	862	750
		600	616	2000	550	1012	1000
		750	752	2000	650	1112	1000
		900	924	2500	800	1262	1250
960	960	200	220	1500	400	880	750
		400	427	1500	400	880	750
		600	616	2000	550	1030	1000
		750	752	2000	650	1130	1000
		960	960	2500	800	1280	1250
1000	1026	200	220	1500	400	913	750
		450	478	2000	450	963	1000
		650	650	2000	550	1063	1000
		800	820	2000	700	1213	1000
		1000	1026	2500	850	1363	1250

Table contains selected branch sizes. For our full portfolio, please visit www.amiblu.com/amiblu-products.
Sizes can be adapted to meet transport requirements. For project-related dimensions, please contact Amiblu.

Amiblu Holding GmbH | Pischeldorfer Str. 128 | 9020 Klagenfurt | Austria | +43 463 482424 | www.amiblu.com | info@amiblu.com
© Amiblu Holding GmbH. Figures may slightly vary due to manufacturing tolerances. Amiblu does not accept any liability for errors, omissions, and subsequent changes to technical data.
Publication: 01/2020

T-Piece Concentric PN 10

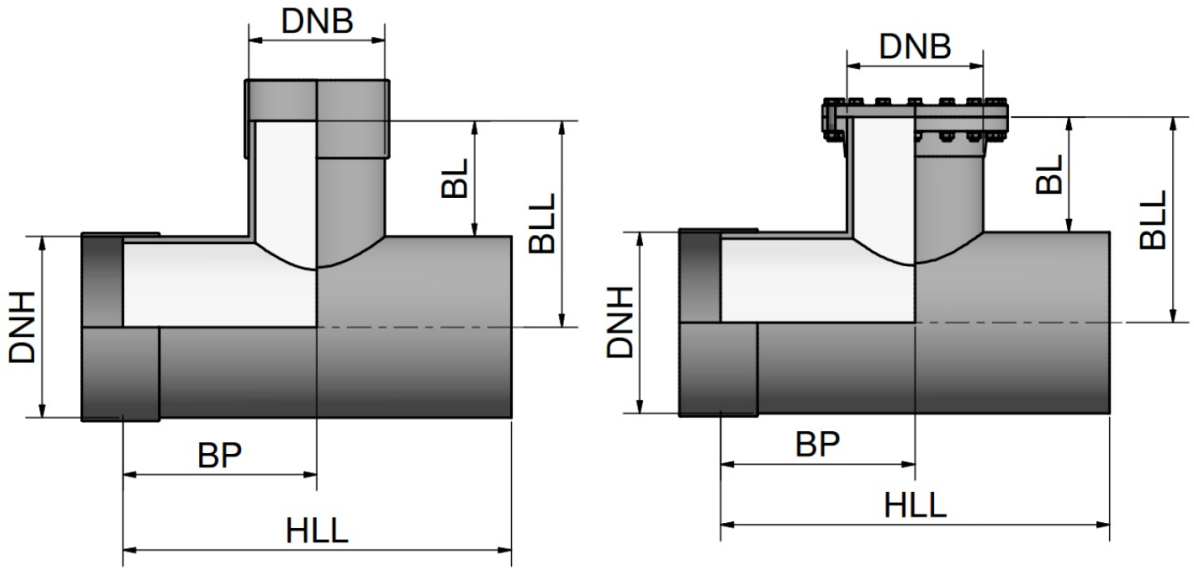

DN_H	d_{eH} [mm]	DN_B	d_{eB} [mm]	HLL [mm]	BL [mm]	BLL [mm]	BP [mm]
1100	1099	200	220	1500	400	950	750
		450	478	2000	450	1000	1000
		650	650	2000	550	1100	1000
		860	860	2500	700	1250	1250
		1100	1099	2500	900	1450	1250
1200	1229	200	220	1500	400	1015	750
		450	478	2000	450	1065	1000
		700	718	2000	550	1165	1000
		900	924	2500	800	1415	1250
		1200	1229	3000	950	1565	1500
1280	1280	200	220	1500	400	1040	750
		450	478	2000	450	1090	1000
		650	650	2000	550	1190	1000
		860	860	2500	700	1340	1250
		1100	1099	2500	900	1540	1250
1400	1434	200	220	1500	400	1117	750
		450	478	2000	450	1167	1000
		700	718	2000	550	1267	1000
		900	924	2500	800	1517	1250
		1280	1280	3000	1000	1717	1500

Table contains selected branch sizes. For our full portfolio, please visit www.amiblu.com/amiblu-products.
Sizes can be adapted to meet transport requirements. For project-related dimensions, please contact Amiblu.

Amiblu Holding GmbH | Pischeldorfer Str. 128 | 9020 Klagenfurt | Austria | +43 463 482424 | www.amiblu.com | info@amiblu.com
© Amiblu Holding GmbH. Figures may slightly vary due to manufacturing tolerances. Amiblu does not accept any liability for errors, omissions, and subsequent changes to technical data.
Publication: 01/2020

T-Piece Concentric PN 10

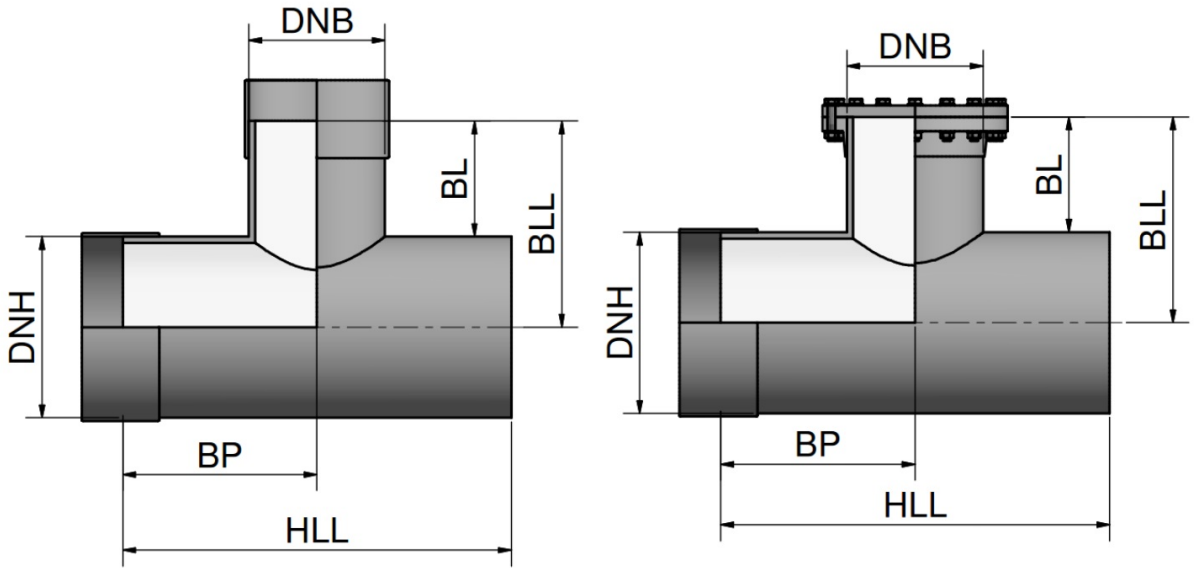

DN_H	d_{eH} [mm]	DN_B	d_{eB} [mm]	HLL [mm]	BL [mm]	BLL [mm]	BP [mm]
1500	1499	200	220	1500	400	1150	750
		450	478	2000	450	1200	1000
		650	650	2000	550	1300	1000
		860	860	2500	700	1450	1250
		1100	1099	3000	900	1650	1500
1535	1535	200	220	1500	400	1168	750
		450	478	2000	450	1218	1000
		650	650	2500	550	1318	1250
		860	860	2500	700	1468	1250
		1100	1099	3000	900	1668	1500
1600	1638	200	220	1500	400	1219	750
		450	478	2000	450	1269	1000
		650	650	2500	550	1369	1250
		860	860	2500	700	1519	1250
		1100	1099	3000	900	1719	1500
1720	1720	200	220	1500	400	1260	750
		400	427	2000	400	1260	1000
		550	550	2000	500	1360	1000
		650	650	2500	550	1410	1250
		800	820	2500	700	1560	1250

Table contains selected branch sizes. For our full portfolio, please visit www.amiblu.com/amiblu-products.
Sizes can be adapted to meet transport requirements. For project-related dimensions, please contact Amiblu.

Amiblu Holding GmbH | Pischeldorfer Str. 128 | 9020 Klagenfurt | Austria | +43 463 482424 | www.amiblu.com | info@amiblu.com
© Amiblu Holding GmbH. Figures may slightly vary due to manufacturing tolerances. Amiblu does not accept any liability for errors, omissions, and subsequent changes to technical data.
Publication: 01/2020

T-Piece Concentric PN 10

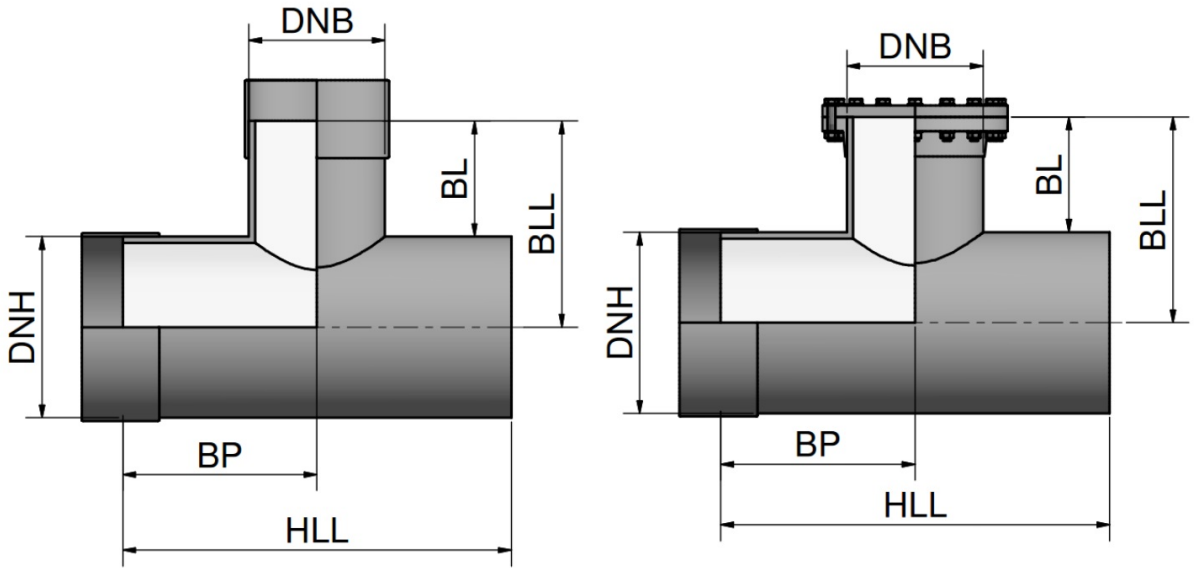

DN_H	d_{eH} [mm]	DN_B	d_{eB} [mm]	HLL [mm]	BL [mm]	BLL [mm]	BP [mm]
1800	1842	200	220	1500	400	1321	750
		400	427	2000	400	1321	1000
		550	550	2000	500	1421	1000
		650	650	2500	550	1471	1250
		800	820	2500	700	1621	1250
1940	1937	200	220	1500	400	1369	750
		400	427	2000	400	1369	1000
		550	550	2000	500	1469	1000
		650	650	2500	550	1519	1250
		800	820	2500	700	1669	1250
2000	2047	200	220	1500	400	1424	750
		400	427	2000	400	1424	1000
		550	550	2000	500	1524	1000
		650	650	2500	550	1574	1250
		800	820	2500	700	1724	1250
2160	2160	200	220	1500	400	1480	750
		400	427	2000	400	1480	1000
		550	550	2500	500	1580	1250
		650	650	2500	550	1630	1250
		800	820	2500	700	1780	1250

Table contains selected branch sizes. For our full portfolio, please visit www.amiblu.com/amiblu-products.
Sizes can be adapted to meet transport requirements. For project-related dimensions, please contact Amiblu.

Amiblu Holding GmbH | Pischeldorfer Str. 128 | 9020 Klagenfurt | Austria | +43 463 482424 | www.amiblu.com | info@amiblu.com
© Amiblu Holding GmbH. Figures may slightly vary due to manufacturing tolerances. Amiblu does not accept any liability for errors, omissions, and subsequent changes to technical data.
Publication: 01/2020

T-Piece Concentric PN 10

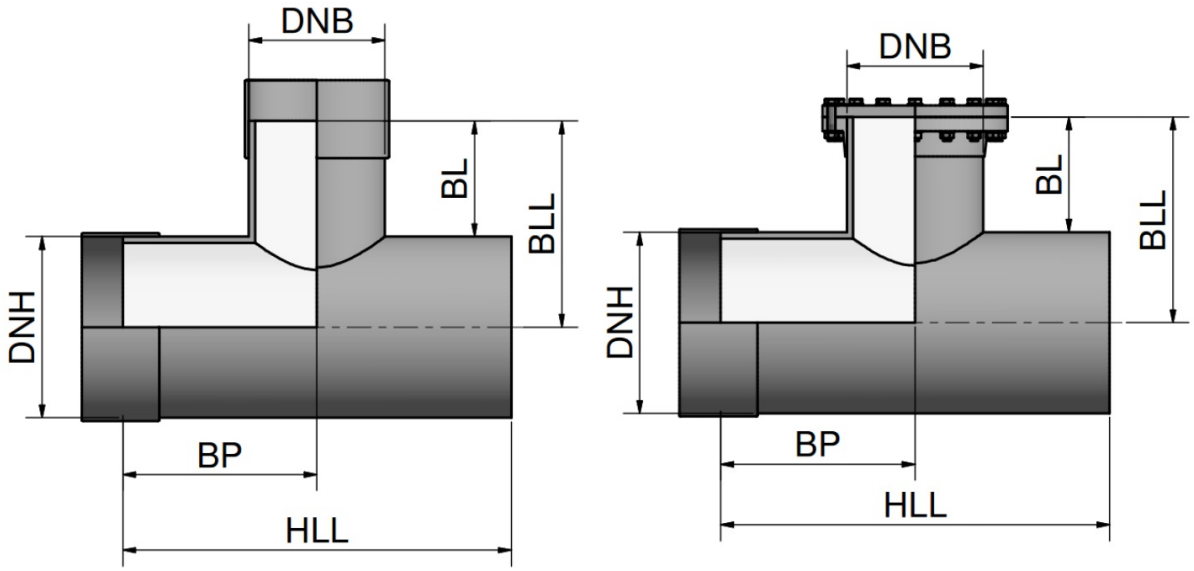

DN_H	d_{eH} [mm]	DN_B	d_{eB} [mm]	HLL [mm]	BL [mm]	BLL [mm]	BP [mm]
2200	2250	200	220	1500	400	1525	750
		400	427	2000	400	1525	1000
		550	550	2500	500	1625	1250
		650	650	2500	550	1675	1250
		800	820	2500	700	1825	1250
2400	2400	200	220	1500	400	1600	750
		400	427	2000	400	1600	1000
		550	550	2500	500	1700	1250
		650	650	2500	550	1750	1250
		800	820	2500	700	1900	1250
2453	2453	200	220	1500	400	1627	750
		400	427	2000	400	1627	1000
		550	550	2500	500	1727	1250
		650	650	2500	550	1777	1250
		800	820	3000	700	1927	1500

Table contains selected branch sizes. For our full portfolio, please visit www.amiblu.com/amiblu-products.
Sizes can be adapted to meet transport requirements. For project-related dimensions, please contact Amiblu.

Amiblu Holding GmbH | Pischeldorfer Str. 128 | 9020 Klagenfurt | Austria | +43 463 482424 | www.amiblu.com | info@amiblu.com
© Amiblu Holding GmbH. Figures may slightly vary due to manufacturing tolerances. Amiblu does not accept any liability for errors, omissions, and subsequent changes to technical data.
Publication: 01/2020

Reducer PN 6

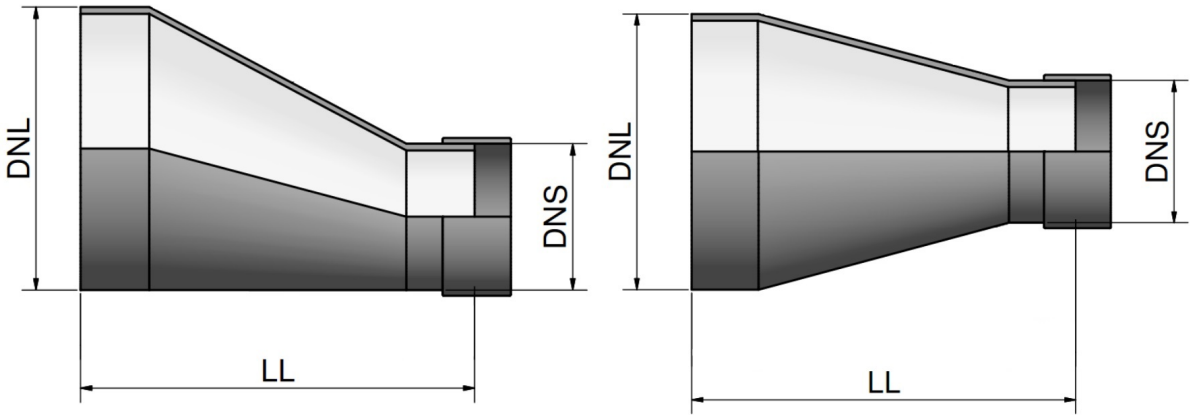

DN_L	d_{eL} [mm]	DN_S	d_{eS} [mm]	LL [mm]	DN_S	d_{eS} [mm]	LL [mm]	DN_S	d_{eS} [mm]	LL [mm]	DN_S	d_{eS} [mm]	LL [mm]
250	272	200	220	750	-	-	-	-	-	-	-	-	-
300	324	250	272	750	200	220	900	-	-	-	-	-	-
350	376	300	324	750	250	272	900	200	220	1000	-	-	-
400	427	350	376	750	300	324	900	250	272	1000	200	220	1200
450	478	400	427	750	350	376	900	300	324	1000	250	272	1200
500	530	450	478	750	400	427	1000	350	376	1000	300	324	1200
550	550	500	530	750	450	478	1000	400	427	1000	350	376	1200
600	616	550	550	750	500	530	1000	450	478	1000	400	427	1200
650	650	600	616	750	550	550	1000	500	530	1000	450	478	1200
700	718	650	650	1000	600	616	1000	550	550	1200	500	530	1200
750	752	700	718	1000	650	650	1000	600	616	1200	550	550	1200
800	820	750	752	1000	700	718	1000	650	650	1200	600	616	1200
860	860	800	820	1000	750	752	1000	700	718	1200	650	650	1200
900	924	860	860	1000	800	820	1000	750	752	1200	700	718	1200
960	960	900	924	1000	860	860	1000	800	820	1200	750	752	1200
1000	1026	960	960	1000	900	924	1000	860	860	1200	800	820	1500
1100	1099	1000	1026	1000	960	960	1000	900	924	1200	860	860	1500
1200	1229	1100	1099	1100	1000	1026	1300	960	960	1500	900	924	1500
1280	1280	1200	1229	1100	1100	1099	1300	1000	1026	1500	960	960	1750
1400	1434	1280	1280	1300	1200	1229	1500	1100	1099	1750	1000	1026	1750

Sizes can be adapted to meet transport requirements. For project-related dimensions, please contact Amiblu.

Amiblu Holding GmbH | Pischeldorfer Str. 128 | 9020 Klagenfurt | Austria | +43 463 482424 | www.amiblu.com | info@amiblu.com
© Amiblu Holding GmbH. Figures may slightly vary due to manufacturing tolerances. Amiblu does not accept any liability for errors, omissions, and subsequent changes to technical data.
Publication: 01/2020

Reducer PN 6

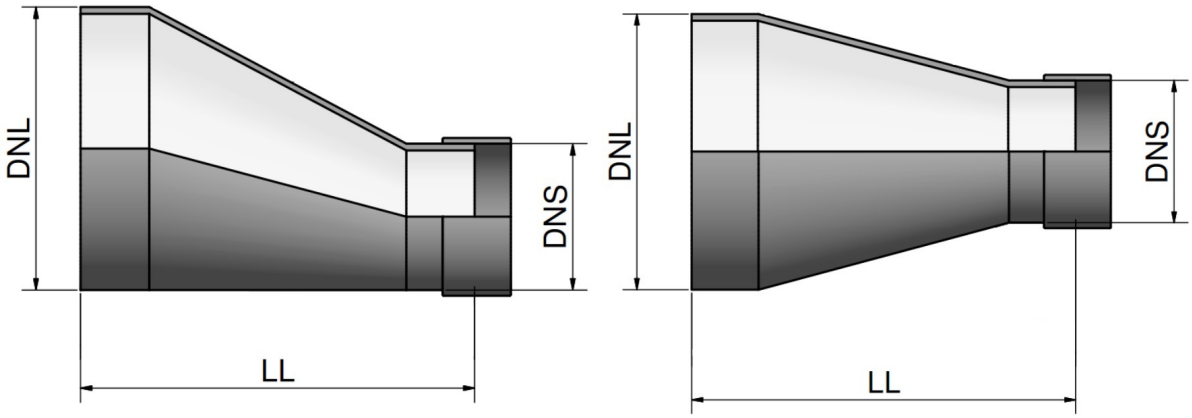

DN_L	d_{eL} [mm]	DN_S	d_{eS} [mm]	LL [mm]	DN_S	d_{eS} [mm]	LL [mm]	DN_S	d_{eS} [mm]	LL [mm]	DN_S	d_{eS} [mm]	LL [mm]
1500	1499	1400	1434	1100	1280	1280	1500	1200	1229	1750	1100	1099	1750
1535	1535	1500	1499	1100	1400	1434	1300	1280	1280	1750	1200	1229	1750
1600	1638	1535	1535	1200	1500	1499	1300	1400	1434	1500	1280	1280	1750
1720	1720	1600	1638	1200	1535	1535	1500	1500	1499	1500	1400	1434	1750
1800	1842	1720	1720	1200	1600	1638	1500	1535	1535	1750	1500	1499	1750
1940	1937	1800	1842	1200	1720	1720	1500	1600	1638	1750	1535	1535	2000
2000	2047	1940	1937	1200	1800	1842	1500	1720	1720	1750	1600	1638	2000
2160	2160	2000	2047	1200	1940	1937	1500	1800	1842	1750	1720	1720	2250
2200	2250	2160	2160	1500	2000	2047	1500	1940	1937	2000	1800	1842	2250
2400	2400	2200	2250	1500	2160	2160	1750	2000	2047	2000	1940	1937	2250
2453	2453	2400	2400	1500	2200	2250	1750	2160	2160	2000	2000	2047	2250
2555	2555	2453	2453	1500	2400	2400	1750	2200	2250	2000	2160	2160	2250

Sizes can be adapted to meet transport requirements. For project-related dimensions, please contact Amiblu.

Amiblu Holding GmbH | Pischeldorfer Str. 128 | 9020 Klagenfurt | Austria | +43 463 482424 | www.amiblu.com | info@amiblu.com
© Amiblu Holding GmbH. Figures may slightly vary due to manufacturing tolerances. Amiblu does not accept any liability for errors, omissions, and subsequent changes to technical data.
Publication: 01/2020

Reducer PN 10

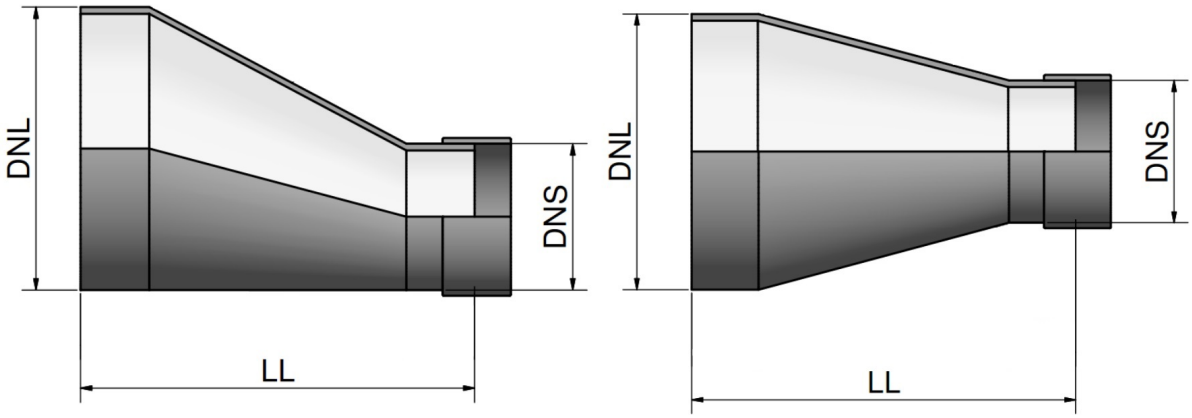

DN_L	d_{eL} [mm]	DN_S	d_{eS} [mm]	LL [mm]	DN_S	d_{eS} [mm]	LL [mm]	DN_S	d_{eS} [mm]	LL [mm]	DN_S	d_{eS} [mm]	LL [mm]
250	272	200	220	750	-	-	-	-	-	-	-	-	-
300	324	250	272	750	200	220	900	-	-	-	-	-	-
350	376	300	324	750	250	272	900	200	220	1000	-	-	-
400	427	350	376	750	300	324	900	250	272	1000	200	220	1200
450	478	400	427	750	350	376	900	300	324	1000	250	272	1200
500	530	450	478	750	400	427	1000	350	376	1000	300	324	1200
550	550	500	530	750	450	478	1000	400	427	1000	350	376	1200
600	616	550	550	750	500	530	1000	450	478	1000	400	427	1200
650	650	600	616	750	550	550	1000	500	530	1000	450	478	1200
700	718	650	650	1000	600	616	1000	550	550	1200	500	530	1200
750	752	700	718	1000	650	650	1000	600	616	1200	550	550	1200
800	820	750	752	1000	700	718	1000	650	650	1200	600	616	1200
860	860	800	820	1000	750	752	1000	700	718	1200	650	650	1200
900	924	860	860	1000	800	820	1000	750	752	1200	700	718	1200
960	960	900	924	1000	860	860	1000	800	820	1200	750	752	1200
1000	1026	960	960	1000	900	924	1000	860	860	1200	800	820	1500
1100	1099	1000	1026	1000	960	960	1000	900	924	1200	860	860	1500
1200	1229	1100	1099	1100	1000	1026	1300	960	960	1500	900	924	1500
1280	1280	1200	1229	1100	1100	1099	1300	1000	1026	1500	960	960	1750
1400	1434	1280	1280	1300	1200	1229	1500	1100	1099	1750	1000	1026	1750

Sizes can be adapted to meet transport requirements. For project-related dimensions, please contact Amiblu.

Amiblu Holding GmbH | Pischeldorfer Str. 128 | 9020 Klagenfurt | Austria | +43 463 482424 | www.amiblu.com | info@amiblu.com
© Amiblu Holding GmbH. Figures may slightly vary due to manufacturing tolerances. Amiblu does not accept any liability for errors, omissions, and subsequent changes to technical data.
Publication: 01/2020

Reducer PN 10

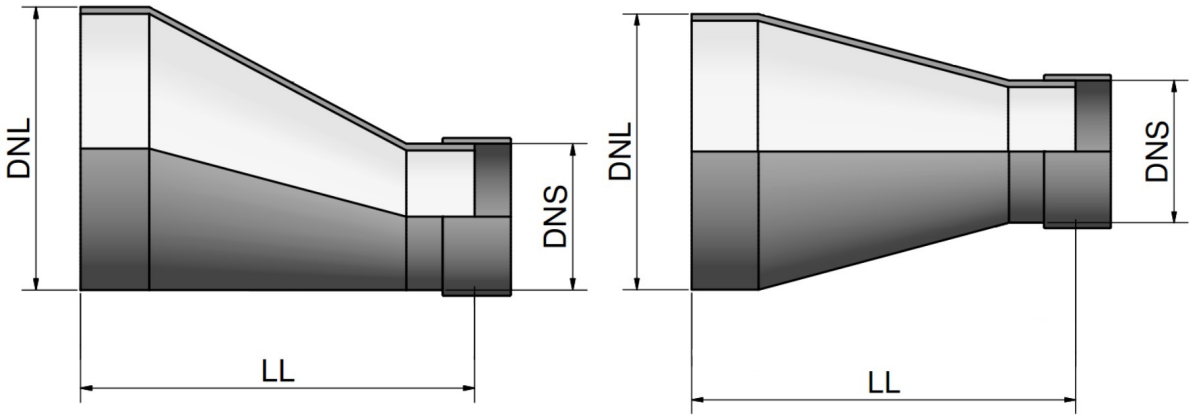

DN_L	d_{eL} [mm]	DN_S	d_{eS} [mm]	LL [mm]	DN_S	d_{eS} [mm]	LL [mm]	DN_S	d_{eS} [mm]	LL [mm]	DN_S	d_{eS} [mm]	LL [mm]
1500	1499	1400	1434	1100	1280	1280	1500	1200	1229	1750	-	-	-
1535	1535	1500	1499	1100	1400	1434	1300	1280	1280	1750	1200	1229	1750
1600	1638	1535	1535	1200	1500	1499	1300	1400	1434	1500	1280	1280	1750
1720	1720	1600	1638	1200	1535	1535	1500	1500	1499	1500	1400	1434	1750
1800	1842	1720	1720	1200	1600	1638	1500	1535	1535	1750	1500	1499	1750
1940	1937	1800	1842	1200	1720	1720	1500	1600	1638	1750	1535	1535	2000
2000	2047	1940	1937	1200	1800	1842	1500	1720	1720	1750	1600	1638	2000
2160	2160	2000	2047	1200	1940	1937	1500	1800	1842	1750	1720	1720	2250
2200	2250	2160	2160	1500	2000	2047	1500	1940	1937	2000	1800	1842	2250
2400	2400	2200	2250	1500	2160	2160	1750	2000	2047	2000	1940	1937	2250
2453	2453	2400	2400	1500	2200	2250	1750	2160	2160	2000	2000	2047	2250
2555	2555	2453	2453	1500	2400	2400	1750	2200	2250	2000	2160	2160	2250

Sizes can be adapted to meet transport requirements. For project-related dimensions, please contact Amiblu.

Amiblu Holding GmbH | Pischeldorfer Str. 128 | 9020 Klagenfurt | Austria | +43 463 482424 | www.amiblu.com | info@amiblu.com
© Amiblu Holding GmbH. Figures may slightly vary due to manufacturing tolerances. Amiblu does not accept any liability for errors, omissions, and subsequent changes to technical data.
Publication: 01/2020

Notes

Why there is nothing else like an Amiblu pipe system

Engineered for the next 150 years

Service-focused partners to solve your problems

Innovation to challenge the status quo

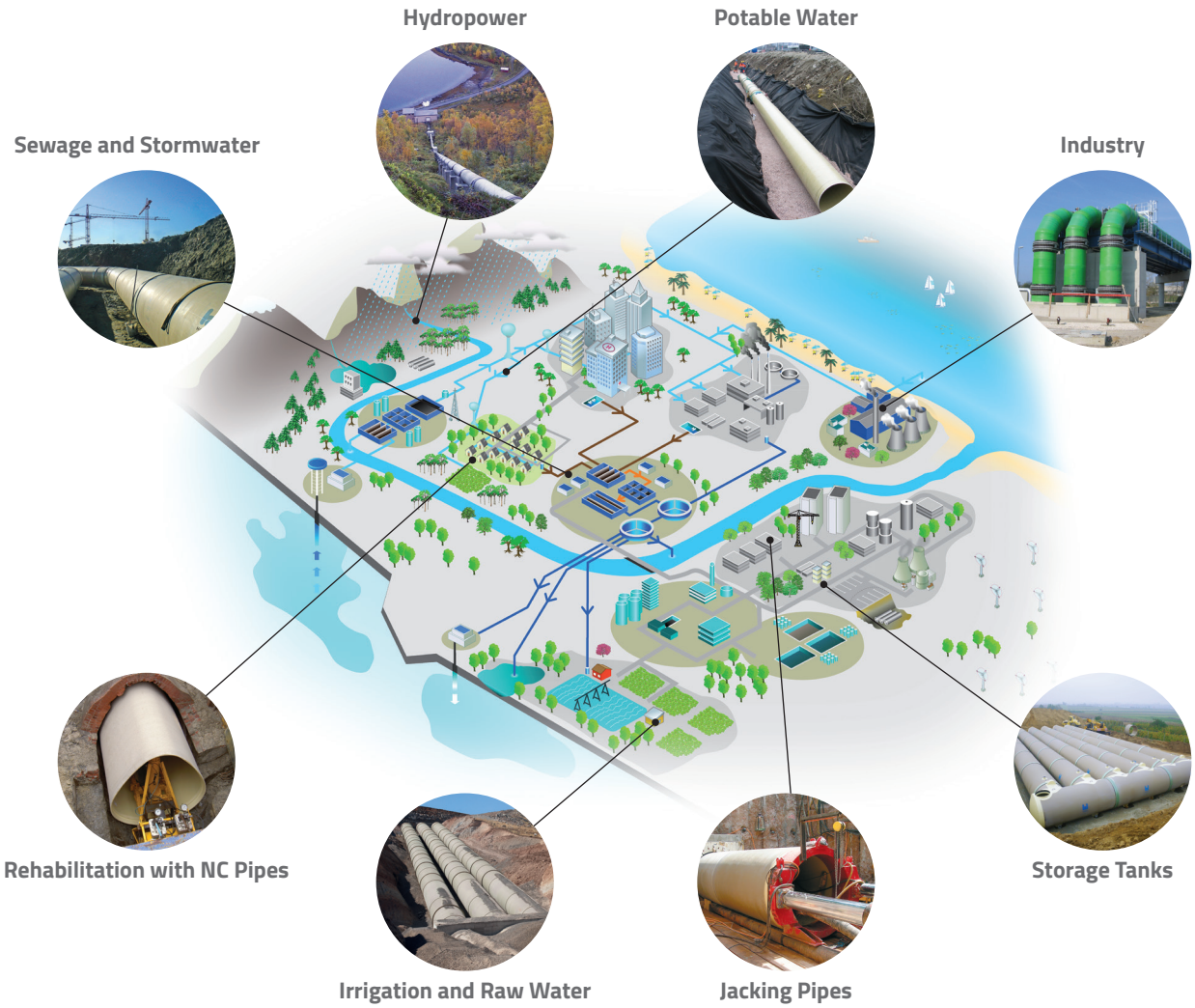

Amiblu®

Explore more on **amiblu.com** or contact your local partner for sustainable GRP pipe solutions.

All rights reserved. No part of this document may be reproduced in any form or by any means without prior written permission. All data, especially technical data, is subject to subsequent modifications. The data given is not binding and must therefore be checked in each individual case and revised as appropriate.
© Amiblu Holding GmbH, Publication: 01/2020 | Rev. 1.2

HOBAS®

Amiblu Pipe Systems
Engineered for the next 150 years