base™

BASE Mid/Low Level Cistern Only 4.5/3L White (4*)

1 Check that the pan is installed within dimensional tolerances. Mark out the fixing holes for the cistern on the wall making sure they are level.

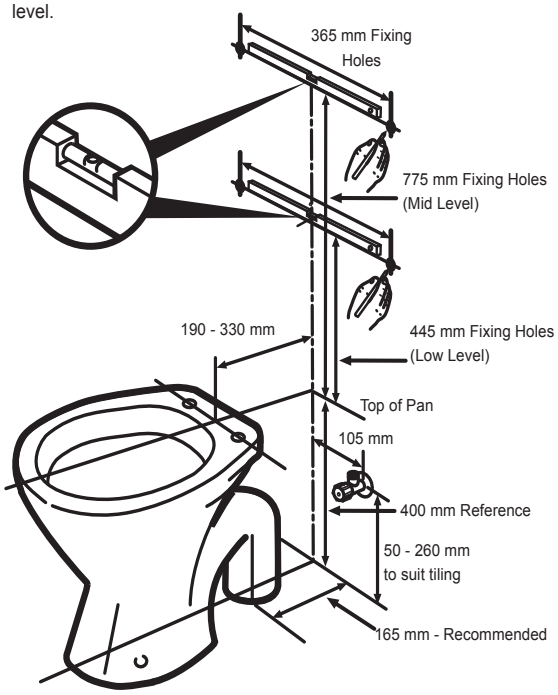

2 In masonry, drill 8mm diameter holes and insert the plugs provided. In timber, drill 3mm diameter pilot holes.
Leave the screws protruding

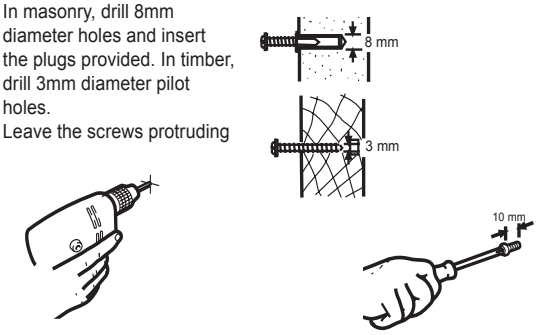

3 When installing low level use L-shaped pipe only. For mid level fit the seal and lubricate it with soap and water. Push firmly into the shorter leg of the flush pipe.

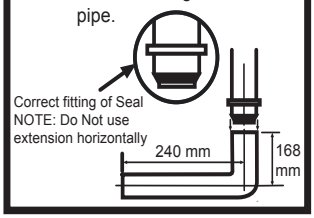

4 Cut the flushpipe to dimensions shown. Lubricate the kee seal with soap and water and fit the

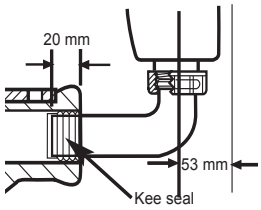

5 Lower the cistern onto the pipe and hook it over the mounting screws.

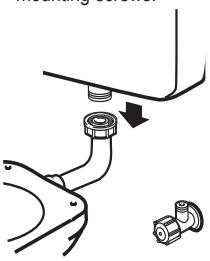

6 Hand tighten the nut.

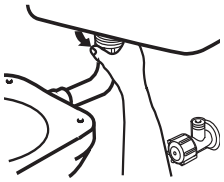

7 Nip up the mounting screws

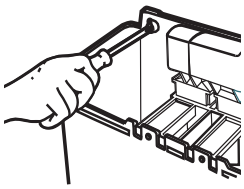

8 Flush the water supply line.

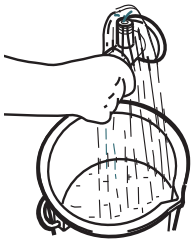

9 Make sure that the strainer is in place. Then fit the water supply pipe using approved fittings.

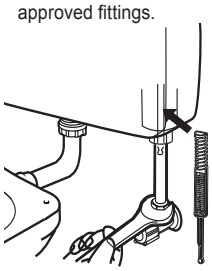

10 Turn on the water. Operate the cistern and check for leaks.

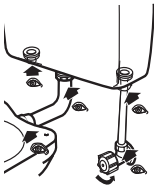

11 Actuate the Inlet valve at least once to purge any trapped air in the valve. Adjust the water level to the WL2 mark.

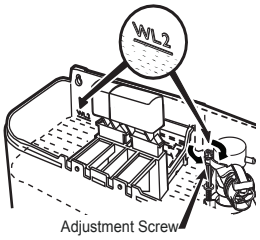

12 Carefully refit the lid.

Plumbers, please ensure a copy of the installation instructions is left with the end user for future reference

reece™