Specification Sheet

Milli Axon MK2 Vanity Towel Holder 330mm Matte Black

9507148

SPECIFICATIONS	
Recommended Use	Domestic, Hotel & Commercial
Colour	Matte Black
Material	Aluminium/Zinc Alloy
WARRANTY	
Domestic Use Replacement Only	15 Years
Please refer to Warranty Page for full Terms and Conditions	

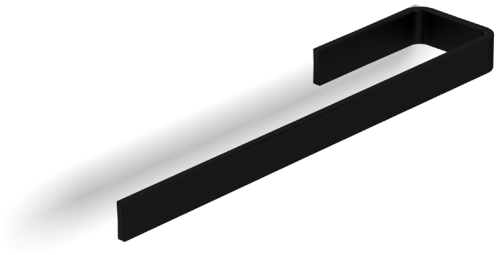

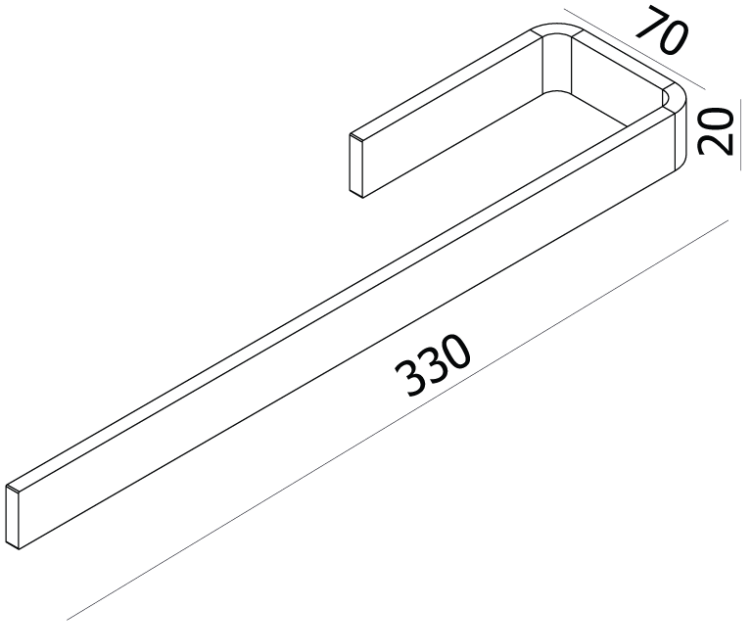

Dimensions are nominal measurements only.

CLEANING RECOMMENDATIONS:
We recommend the use of soapy water or approved cleaners. This product should not be cleaned with abrasive materials. Damage caused by any improper treatment is not covered by the product warranty. Refer to Warranty Conditions

Disclaimer: Products in this specification manual must by regulation be installed by licensed and registered trade people. The manufacturer/distributor reserves the right to vary specifications or delete models from their range without prior notification. Dimensions are nominal measurements only. Dimensions and set-outs listed are correct at time of publication however the manufacturer/distributor takes no responsibility for printing errors.

Published 28/07/2021

To see the complete Milli range go to
www.reece.com.au