Specification Sheet

S U S S E X

Sussex Scala Basin Mixer Tap with 150mm Extension Pin LUX PVD Brushed Oyster Nickel (5 Star)

2267142

SPECIFICATIONS	
Recommended Use	Domestic;Hotel;Commercial
Colour Finish	Brushed Oyster Nickel
Primary Material	Brass
Recommended Pressure Range	150 - 500 kPa as per AS3500
Max Continuous Working Temperature (deg C)	65
Min Continuous Working Temperature (deg C)	5
Hot Water Unit Suitability	Gravity Feed;Storage Tank;Continuous Flow
WARRANTY	
Warranty - Domestic Use (Years)	15
Spare Parts & Labour (Years)	15
Please refer to Warranty Page for full Terms and Conditions	

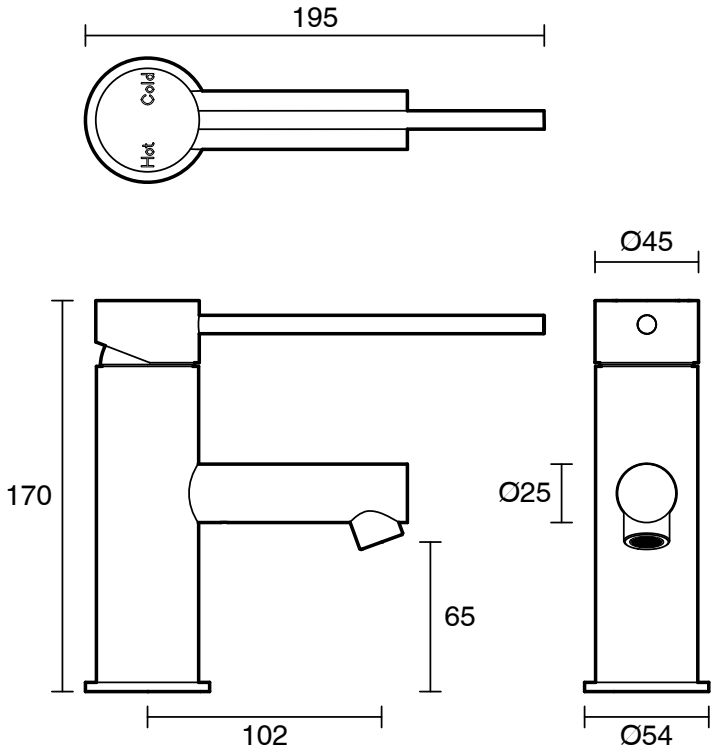

Dimensions are nominal measurements only.

WATER RATING
www.waterrating.gov.au
5.0 litres per minute
In accordance with AS/NZS 6400
Licence No. 0124
Sussex Taps Pty Ltd

CLEANING RECOMMENDATIONS:
We recommend the use of soapy water or approved cleaners. This product should not be cleaned with abrasive materials. Damage caused by any improper treatment is not covered by the product warranty. Refer to Warranty Conditions

WaterMark
AS/NZS 3718
WMKA20081

Disclaimer: Products in this specification manual must by regulation be installed by licensed and registered trade people. The manufacturer/distributor reserves the right to vary specifications or delete models from their range without prior notification. Dimensions are nominal measurements only. Dimensions and set-outs listed are correct at time of publication however the manufacturer/distributor takes no responsibility for printing errors.

Published 25/03/2025

To see the complete Sussex range go to
www.reece.com.au

reece