PRODUCT INFORMATION SHEET

SET-ARTH45KHTA-3PH

R32 High Static Three Phase - SET-ARTH45KHTA-3PH - Reverse Cycle



ARTH45KHTA



AOTH45KRTA



UTY-RNRT

Key features

Demand Response

This product is designed to be compatible with Air Conditioning Demand Response program. When your electricity supplier activates one of the three modes the air conditioner switches over to the appropriate operation.

Economy Mode

Limits the maximum operation current, and performs operation with the power consumption suppressed.

Program Timer

This timer allows selection of one of four options. ON, OFF, ON –-> OFF, or OFF –-> ON.

Auto Changeover

The unit automatically switches between operating modes based on the temperature setting and room temperature.

Auto Restart

Should there be a temporary loss of power, the unit will automatically restart itself in the same operating mode, once the power is restored.

Connectable Fresh Air Duct

Allows introduction of fresh air to the occupied space.

Automatic Static Pressure Setting Adjustment

With this feature, the unit automatically sets the optimal static pressure setting, eliminating the need for the installer to select and set the static pressure setting each time.

Connectable Distributing Duct

Systems are capable of attaching a field-supplied branch ducts distributing the airflow.

Key features



On-Off Timer

ON-OFF timer can be set to operate once every 24 hours.



Blue Fin Heat Exchanger

Corrosion-resistance of the heat exchanger in coastal areas has been improved by blue fin treatment of the outdoor unit heat exchanger.



Zone Control

This function enables efficient air-conditioning by selecting specific zones from the various zones divided within the indoor space.



Weekly Timer

Different ON-OFF times can be set for up to 7 days.



In-Built Drain Pump

The drain pump is in-built into the system.



Operating Temperature Range 50°C

The maximum guaranteed operating temperature range to 50 degrees in cooling mode.



Demo Mode

This function allows the indoor unit to be operated alone at exhibitions and showrooms.



Filter Sign

Select appropriate intervals for displaying the filter sign on the indoor unit according to the estimated amount of dust in the air of the room.

Specifications

Model No.	Outdoor Unit			AOTH45KRTA
	Indoor Unit			ARTH45KHTA
Operation Type				Reverse Cycle
Power Source	V / Ph / HZ			400 / 3 / 50
Capacity	Cooling		KW	12.50 (4 - 14)
	Heating		KW	14.00 (4.2 - 16.5)
Input Power	Cooling		KW	3.8
	Heating		KW	3.42
EER	Cooling		kW/kW	3.29
COP	Heating		kW/kW	4.09
Star Rating	Cooling			3
	Heating			3
Noise Level	Indoor Sound Pressure (High / Quiet)	Cooling	dBA	43 / 35
		Heating	dBA	43 / 35
	Outdoor Sound Pressure (Cooling / Heating)		dBA	55 / 57
	Outdoor Sound Power		dBA	71

Electrical	
Power Requirement	400
MCB / Cable Size (mm)	2.5
Interconnecting Wires / Size (mm)	1.5
Recommended Breaker Size (amps)	16

Refrigerant	
Refrigerant Type	R32
Charge (g)	2,180
Pre Charged (M)	30
Maximum Pipe Length (M)	50
Minimum Pipe Length (M)	5
Maximum Pipe Height (M)	30
Additonal Refrigerant Charge (g) Per M	40
Pipe Sizes Suction / Liquid (mm)	15.88 / 9.52
Refrigeration Pipes Connection Method	Flared

Technical Data - Cooling

NOTE: Values calculated are based on maximum capacity

■ Model: ARTH45KHTA

AFR	m^3/h	3,250

		Indoor temperature																				
	°CDB	18			21			23			25			27			29			32		
	°CWB	12			15			16			18			19			21			23		
Outdoor temperature	°CDB	TC	SHC	IP	TC	SHC	IP	TC	SHC	IP	TC	SHC	IP	TC	SHC	IP	TC	SHC	IP	TC	SHC	IP
		kW			kW			kW			kW			kW			kW			kW		
	-10	8.86	8.73	1.62	9.62	9.18	1.66	10.12	9.47	1.69	10.62	9.87	1.71	11.13	10.26	1.73	11.59	10.44	1.73	12.28	10.73	1.73
	0	9.02	8.90	1.68	9.78	9.35	1.72	10.29	9.65	1.75	10.81	10.05	1.77	11.31	10.46	1.80	11.79	10.65	1.80	12.49	10.94	1.80
	5	8.85	8.79	1.73	9.61	9.23	1.77	10.10	9.53	1.79	10.61	9.92	1.81	11.12	10.33	1.84	11.57	10.51	1.84	12.27	10.79	1.84
	10	8.70	8.67	1.76	9.43	9.11	1.80	9.93	9.40	1.83	10.41	9.79	1.86	10.91	10.18	1.88	11.36	10.38	1.88	12.05	10.65	1.88
	15	8.54	8.53	1.83	9.28	8.96	1.87	9.76	9.26	1.89	10.24	9.63	1.92	10.72	10.03	1.95	11.18	10.21	1.95	11.85	10.48	1.95
	20	11.42	10.95	3.23	12.39	11.50	3.30	13.03	11.86	3.35	13.68	12.36	3.40	14.32	12.85	3.45	14.92	13.09	3.45	15.82	13.44	3.45
	25	10.93	10.66	3.34	11.86	11.21	3.42	12.48	11.56	3.47	13.10	12.05	3.52	13.72	12.53	3.57	14.29	12.76	3.57	15.14	13.10	3.57
	30	10.44	10.39	3.45	11.33	10.93	3.53	11.92	11.26	3.58	12.52	11.73	3.63	13.11	12.20	3.68	13.66	12.44	3.68	14.47	12.76	3.68
	35	9.96	9.96	3.57	10.81	10.63	3.64	11.37	10.96	3.69	11.93	11.43	3.75	12.50	11.89	3.80	13.03	12.10	3.80	13.80	12.42	3.80
	40	8.49	8.49	3.47	9.21	9.21	3.55	9.69	9.69	3.61	10.18	10.18	3.66	10.66	10.66	3.71	11.11	10.86	3.71	11.77	11.15	3.71
	46	7.57	7.57	3.37	8.22	8.22	3.45	8.65	8.65	3.50	9.07	9.07	3.55	9.50	9.50	3.60	9.90	9.68	3.60	10.50	9.94	3.60
	50	5.96	5.96	2.62	6.26	6.26	2.68	6.46	6.46	2.72	6.74	6.74	2.76	7.00	7.00	2.80	7.29	7.13	2.80	7.74	7.32	2.80

Technical Data - Heating

NOTE: Values calculated are based on maximum capacity

■ Model: ARTH45KHTA

AFR	m^3/h	3,250

			Indoor temperature									
			16		18		20		22		24	
Outdoor temperature	°CDB	°CWB	TC	IP	TC	IP	TC	IP	TC	IP	TC	IP
			kW		kW		kW		kW		kW	
	-15	-16	11.82	4.92	11.54	4.95	11.26	4.97	11.00	4.97	10.35	4.97
	-10	-11	13.13	5.13	12.82	5.15	12.51	5.19	12.21	5.19	11.48	5.19
	-5	-7	14.44	5.34	14.10	5.37	13.75	5.39	13.43	5.39	12.64	5.39
	0	-2	15.77	5.55	15.39	5.58	15.01	5.61	14.67	5.61	13.80	5.61
	5	3	16.88	5.17	16.48	5.20	16.08	5.23	15.70	5.23	14.76	5.23
	7	6	17.33	5.16	16.91	5.20	16.50	5.22	16.12	5.22	15.15	5.22
	10	8	18.04	5.15	17.62	5.19	17.18	5.21	16.78	5.21	15.78	5.21
	15	10	19.25	5.14	18.78	5.16	18.32	5.19	17.90	5.19	16.84	5.19
	20	15	20.44	5.12	19.95	5.14	19.46	5.17	19.01	5.17	17.88	5.17
	24	18	21.40	5.11	20.89	5.13	20.38	5.15	19.90	5.15	18.71	5.15

AFR: Airflow Rate (m3/min) / High Fan Speed 389 |/s
TC: Total Capacity (KW)
SHC: Sensible Heat Capacity (kW)
IP: Input Power (kW)

Air Flow Data

■ Model: ARTH45KHTA

● Cooling

Fan speed	Airflow	
HIGH	m^3/h	3,250
	l/s	903
	CFM	1,913
MED	m^3/h	2,760
	l/s	767
	CFM	1,625
LOW	m^3/h	2,270
	l/s	631
	CFM	1,336

● Heating

Fan speed	Airflow	
HIGH	m^3/h	3,250
	l/s	903
	CFM	1,913
MED	m^3/h	2,760
	l/s	767
	CFM	1,625
LOW	m^3/h	2,270
	l/s	631
	CFM	1,336

Fan Performance Curve

■ Model: ARTH45KHTA

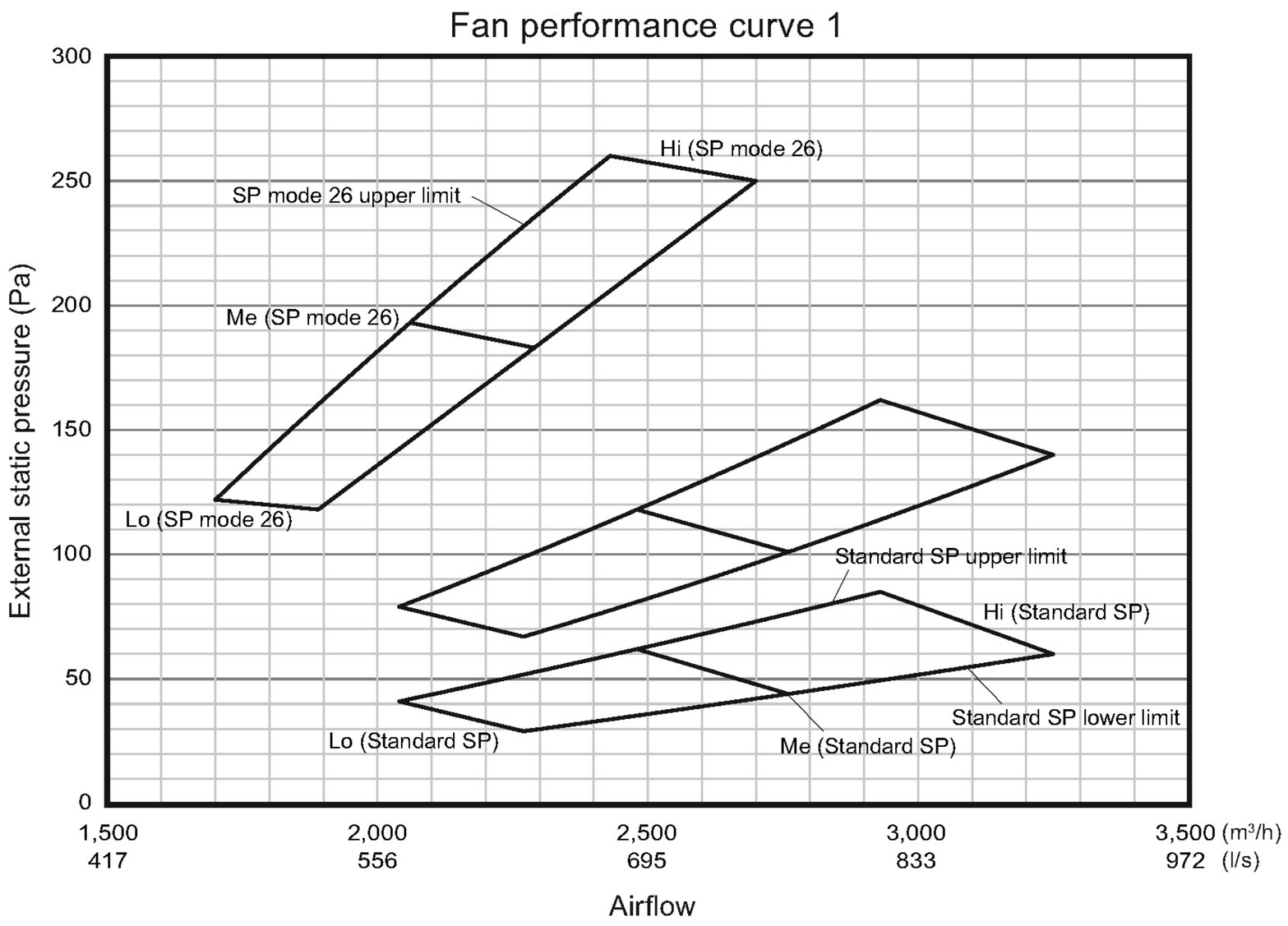

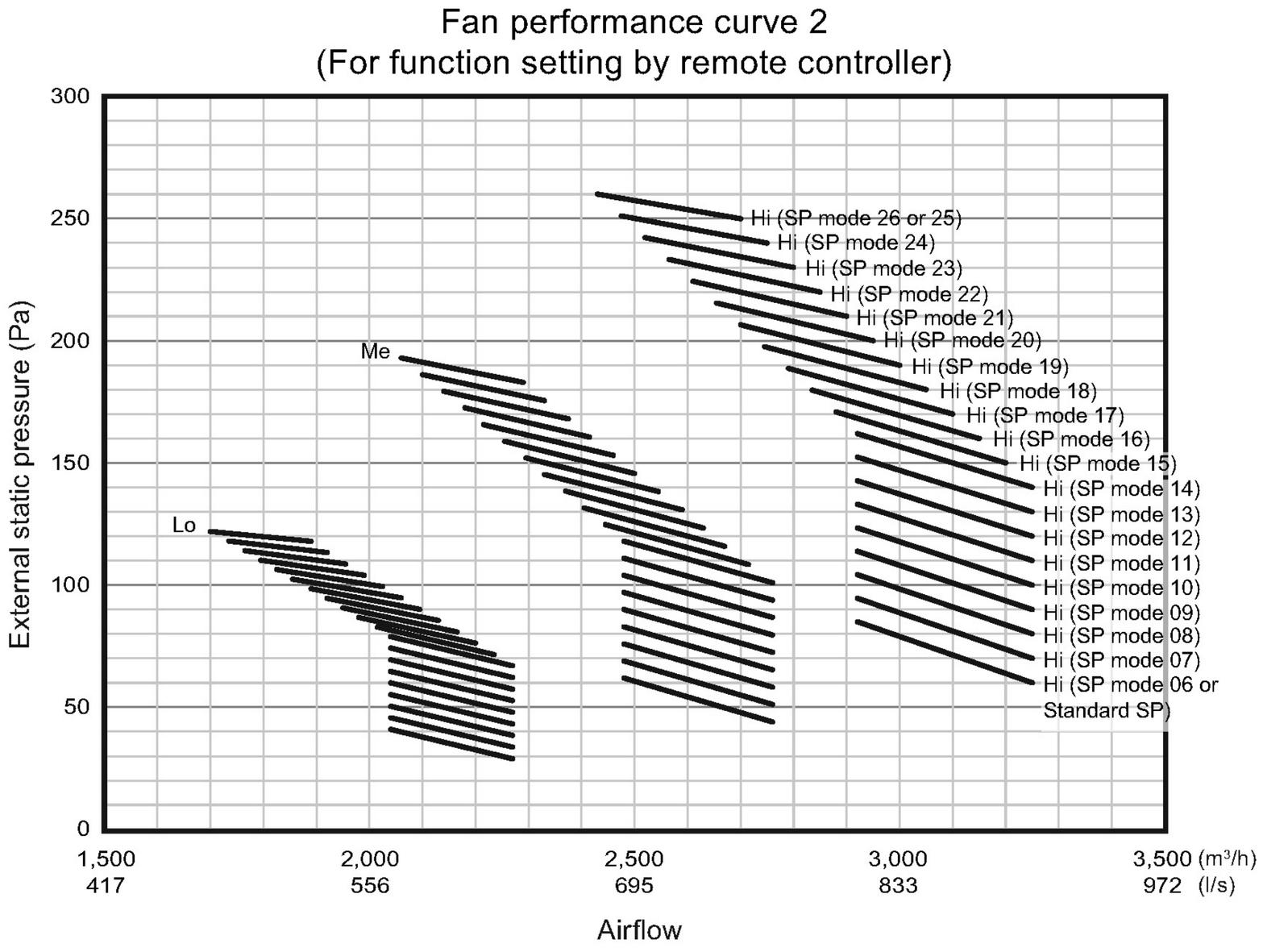

Dimensions

Unit: mm

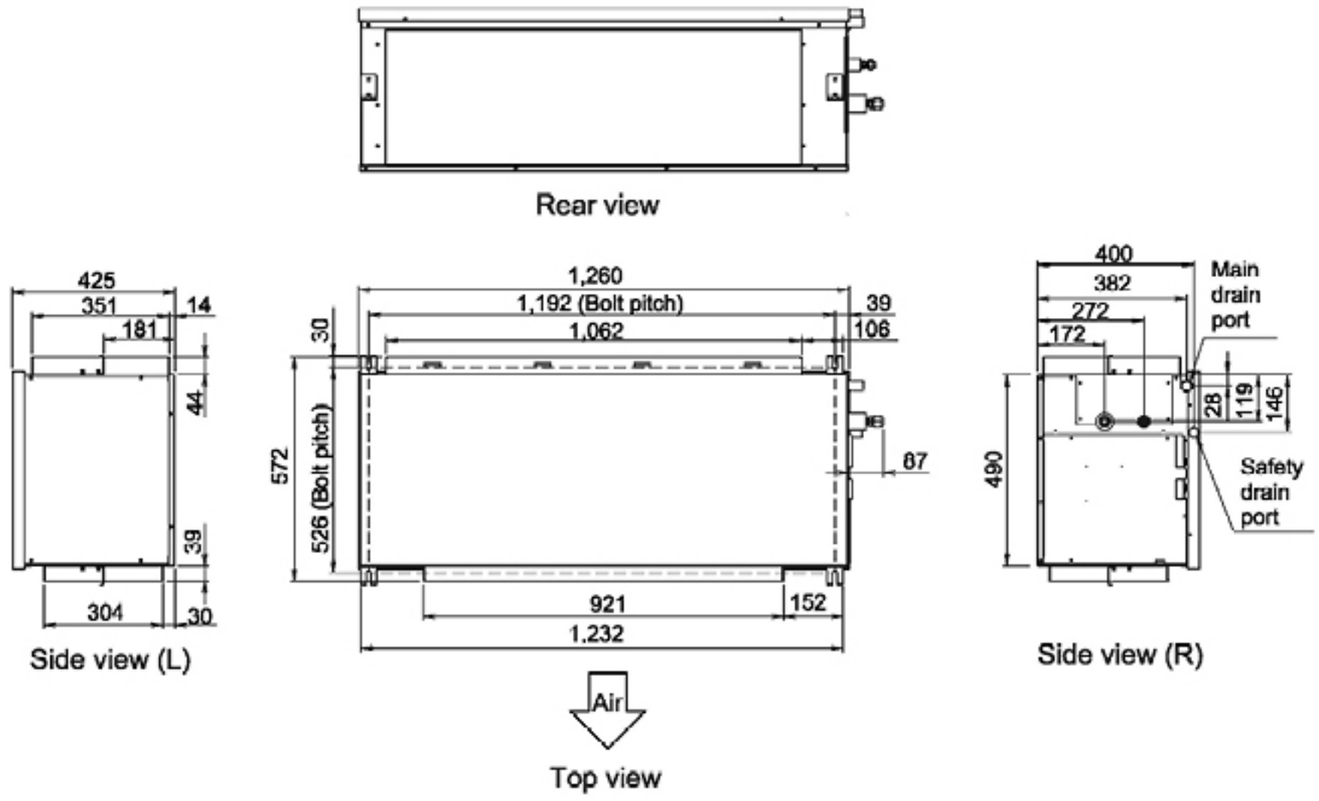

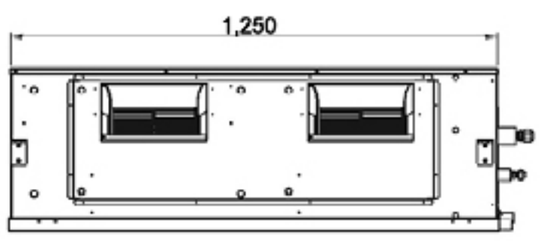

Unit: mm

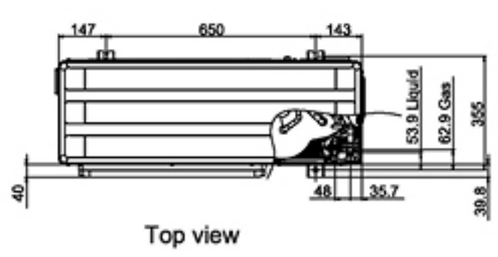

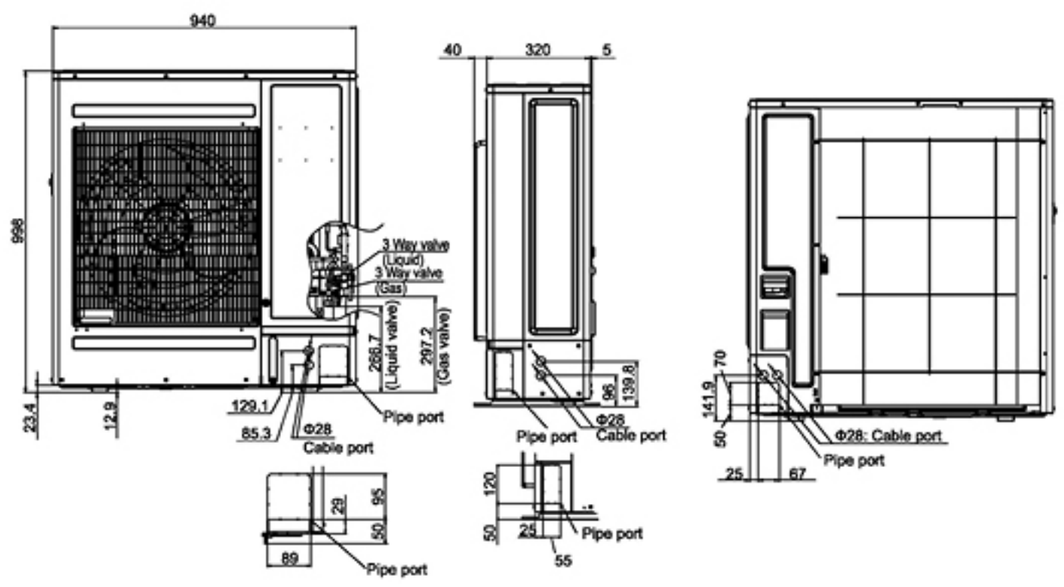

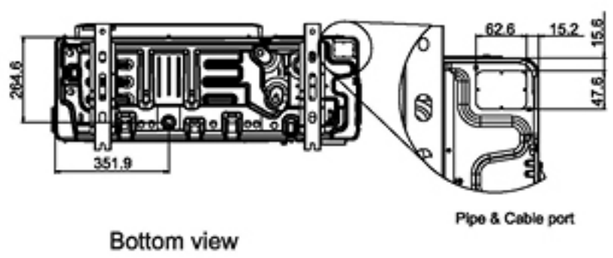

Fujitsu General Assist

Technical Support

Fujitsu General Assist deploys Fujitsu trained technicians in Sydney, Melbourne, Brisbane, Adelaide and Perth and provides access to dedicated Service Agents in all other parts of Australia. These technicians are well equipped with the necessary tools and spare parts to enable them to resolve issues onsite, promptly, offering customers a high first time fix rate and seamless experience.

Exceptional After Sales Service

At Fujitsu, we pride ourselves on providing exceptional customer service. Fujitsu General Assist is our in-house customer care and technical support department which was implemented to deliver a high level of support and accessibility to our customers.

FUJITSU GENERAL assist
1300 882 201

Peace of Mind

Fujitsu believe in the quality and reliability of every air conditioner we sell, providing a 3 years warranty for commercial applications and 5 years warranty for domestic applications

PARTS & LABOUR 5 YEARS WARRANTY

Please refer to specifications before installation and servicing this product. Only persons and/or companies qualified and experienced in the installation, service and repair of refrigerant products should be permitted to do so. The purchaser must ensure that the person and/or company who is to install, service or repair this air conditioner has qualifications and experience in refrigerant products. Suitable access for warranty and service is required. Future improvement, specifications, designs of product and availability are subject to change without notice. All Capacity and Energy Efficiency ratings are based on AS/NZS3823.2. Running current is at rated conditions (AS3823) and does not include compressor start-up or variations in power supply and load conditions.

All wiring specifications are minimum recommendations.
Please consult AS/NZS 3000 and your local wiring rules for clarification of cable and circuit requirements.
SOUND POWER LEVELS measured in accordance to AS1217.
In all conditions, the FAN speed is HIGH.
Specifications and design are subject to change without notice.
Please check with the manufacturer.

Note: Specifications are based on the following conditions.
Cooling: Indoor temperature of 27˚CDB / 19˚CWB, and outdoor temperature of 35˚CDB / 24˚CWB.
Heating: Indoor temperature of 20˚CDB / 15˚CWB, and outdoor temperature of 7˚CDB / 6˚CWB.
Pipe length: 7.5m; Height difference between outdoor unit and indoor unit: 0m. Voltage: 230V.

FUJITSU

FUJITSU GENERAL AUSTRALIA
ABN 55 001 229 554
A SUBSIDIARY OF FUJITSU GENERAL LIMITED

Copyright © Fujitsu General Australia. All rights reserved. PIS-SET-ARTH45KHTA-3PHAU062023