caroma

# Caravelle Close Coupled 4.5/3 litre Pan

## Installation for 'S' trap and 'P' trap

**Note: It is important to position the pan collar 80mm max. from the foot level of pan**

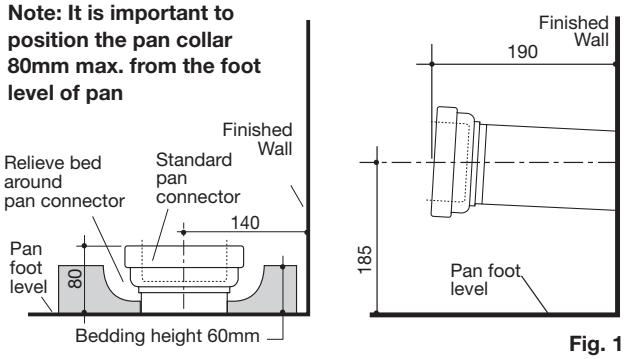


Fig. 1

## Bedding Installation

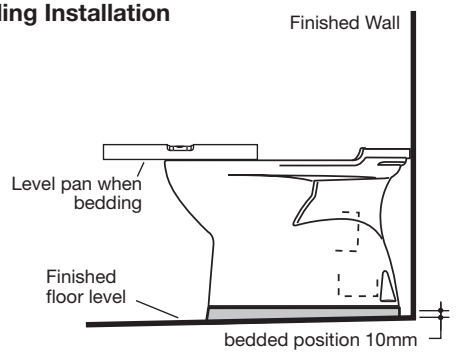


Fig. 2

## Screw Fixing Installation

**Important:**
Do not use the pan screw hole as a guide for drilling as this may crack the pan.

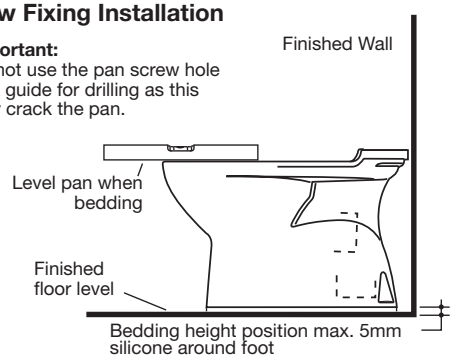


Fig. 3

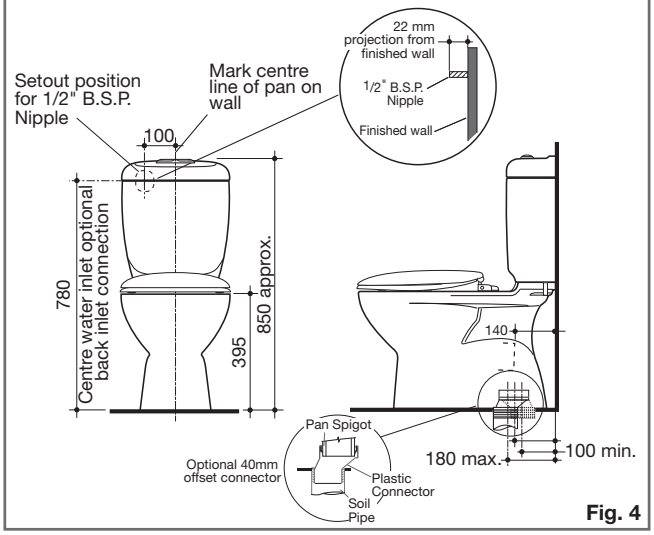


Fig. 4

All measurements are subject to accepted manufacturing tolerances.
To ensure accuracy please check actual product dimensions before drilling for installation.
The manufacturer reserves the right to change specifications at any time without giving prior notification.
This product should be installed by a qualified plumber. Local authority, Water Board, and Building Regulations may apply to the installation of this product, and you should consult the appropriate bodies on these requirements. Failure to comply may invalidate the product warranty.

# PLUMBERS' INSTALLATION INSTRUCTIONS

***PLEASE READ CAREFULLY BEFORE INSTALLATION***
***THESE INSTRUCTIONS SUPERSEDE INSTRUCTIONS IN THE PAN CARTON***

**ROUGHING IN:**
The Caravelle Smartflush pan 'S' and 'P' Trap installation are detailed in **Fig. 1.** The recommended set-out for 'S'-Trap installations is 140mm from the finished wall. **It is important to position the pan collar 80mm max. from the foot level of pan as detailed in Fig. 1.**

For Back inlet connection it is important that the cold water connection (1/2" BSP connector nipple) be accurately position in the wall as detailed in **Fig. 4**.

**Important: Use only Caroma performance approved offset pan connector. Code No: 687270.** The 40mm **optional** off set connector is available to help achieve the set out of 140mm on existing installations, where the soil pipe is between 100mm min. and 180mm max. set out ranges specified for connector, as detailed in **Fig 4**. **(sold separately)**.

**PAN FIXING PROCEDURE**

**Pan bedding:**

**1-** Remove an area of tiles which are within the internal area covered by the foot of the pan to expose the sub floor and provide a bondage key for the bedding mixture.

**2-** Ensure that the bedding area is clean and free of building material.

**3-** Prepare bedding sand cement mixture 3:1 to depth of 60mm as detailed in **Fig.1**.
**Note:** Do not fill the foot of the pan with bedding mix or include lime or fast drying cement into the mix, these may cause cracking in the foot of the pan.

**4-** Position pan and connect with pan connector and level pan into bedding mixture, so that the back of the foot of the pan is approximately 10mm above the finished floor. It is recommended that wedges are used to support the foot of the pan during the positioning, as detailed in **Fig. 2.**

**5-** Adjust pan position if necessary. Allow bedding mixture to set for at least 24 hours prior to use.

**Screw fixing:**

**1-** Position pan onto pan connector and locate the cistern onto the pan, checking that the cistern aligns with the finished wall. Adjust pan position if necessary and mark location of pan fixing holes on the floor. Remove the cistern and pan.

**2-** Drill two holes in the marked positions on the floor. The hole diameter is dependent on the type of fixing system and floor finish.

**IMPORTANT-DO NOT USE THE PAN SCREW HOLES AS A GUIDE FOR DRILLING AS THIS MAY CRACK THE PAN.**

**3-** Ensure that the area around the floor is clean and free from building material.

**4-** Run a bead of acetic cured silicone sealant at a height of 8mm approximately fully around the foot of the pan which contacts the floor. Use Wedges around the foot base (if required) so that the **maximum height of silicone sealant is not greater that 5mm on completion on bedding**, as detailed in **Fig. 3.**

**5-** Reposition pan to pan connector and fix to the floor with suitable corrosion resistant screws. The silicone sealant will bed the pan to the floor. Remove any excess sealant.

**6-** Allow bedding mixture to set for at least 24 hours prior to use.

smartflush system

**IMPORTANT**
TO ACHIEVE A SATISFACTORY 4.5/3L FLUSH PERFORMANCE AND A 4 STAR WATER EFFICIENCY RATING THE PAN MUST BE MATCHED WITH A COMPATIBLE CAROMA SMARTFLUSH 4.5/3L CISTERN.

**Issue No. 5**
**Date of issue 24.11.2010**