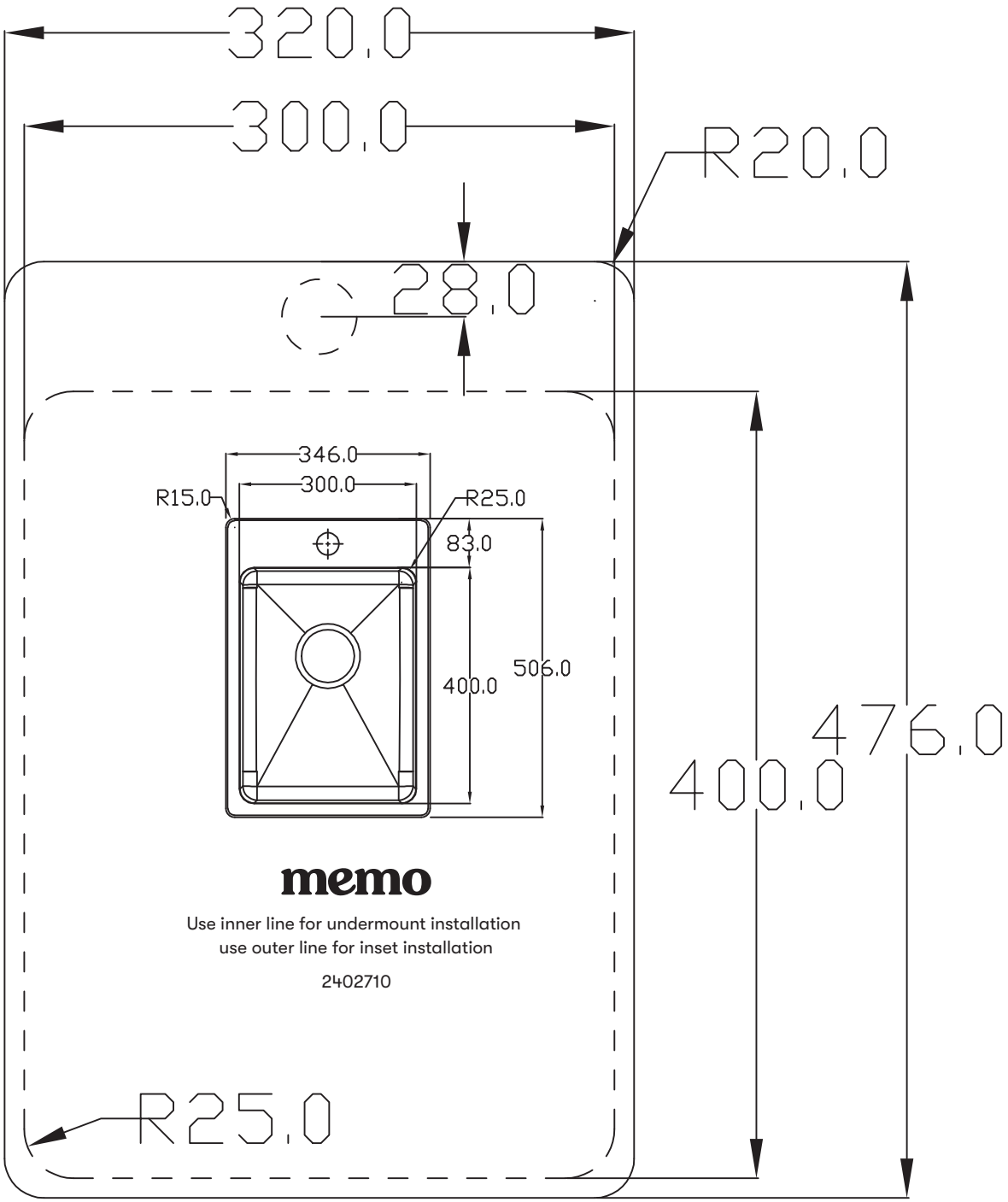

memo

Use inner line for undermount installation
use outer line for inset installation

2402710