Compact packaged
refrigeration condensing units.

COMPAC

R134a & R513A additions

1.3kW —— 4.1kW

Selection Data

SELECTION DATA											
Product Code	Model	Compressor					Fan(s)				Liquid Receiver Capacity kg @ 80%
		Model	Displacement cm^3/rev	Nominal HP	MOC Amps	Vots/Phase	No. Diam. Mm	MOC Amps	Air Flow m^3/hr	Volts/Phases	
MEDIUM TEMPERATURE											
3508064	PACS4476Y-EVO	CAJ4476Y	21.8	0.70	6.80	220-240V/50Hz/1	1 x 450	1.15	5050	220-240V/50Hz/1	3.9
3508065	PACS4492Y-EVO	CAJ4492Y	25.9	0.75	8.90	220-240V/50Hz/1	1 x 450	1.15	5050	220-240V/50Hz/1	3.9
3508066	PAC4492Y-EVO	TAJ4492Y	25.9	0.75	3.50	400-440V/50-60Hz/3	1 x 450	1.15	5050	220-240V/50Hz/1	3.9
3508067	PACS4511Y-EVO	CAJ4511Y	32.7	1.00	8.60	220-240V/50Hz/1	1 x 450	1.15	5050	220-240V/50Hz/1	3.9
3508068	PAC4511Y-EVO	TAJ4511Y	32.7	1.00	3.60	400-440V/50-60Hz/3	1 x 450	1.15	5050	220-240V/50Hz/1	3.9
3508069	PACS4518Y-EVO	FH4518Y	53.2	1.50	11.20	220-240V/50Hz/1	1 x 450	1.15	5050	220-240V/50Hz/1	3.9
3508070	PAC4518Y-EVO	TFH4518Y	53.2	1.50	4.20	400-440V/50-60Hz/3	1 x 450	1.15	5050	220-240V/50Hz/1	3.9
3508071	PACS4525Y-EVO	FH4525Y	74.2	2.00	15.20	220-240V/50Hz/1	1 x 450	1.15	5050	220-240V/50Hz/1	3.9
3508072	PAC4525Y-EVO	TFH4525Y	74.2	2.00	6.70	400-440V/50-60Hz/3	1 x 450	1.15	5050	220-240V/50Hz/1	3.9
3508073	PAC4528Y-EVO	TAG4528Y	90.2	2.30	10.00	400-440V/50-60Hz/3	1 x 500	1.75	6720	220-240V/50Hz/1	3.9
3508074	PAC4534Y-EVO	TAG4534Y	100.7	2.80	10.40	400-440V/50-60Hz/3	1 x 500	1.75	6720	220-240V/50Hz/1	3.9
3508075	PAC4537Y-EVO	TAG4537Y	112.5	3.00	10.00	400-440V/50-60Hz/3	1 x 500	1.75	6720	220-240V/50Hz/1	3.9
3508076	PAC4543Y-EVO	TAG4543Y	124.4	3.60	10.70	400-440V/50-60Hz/3	1 x 500	1.75	6720	220-240V/50Hz/1	3.9

Figure 1

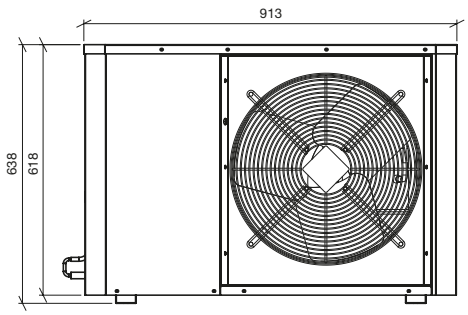

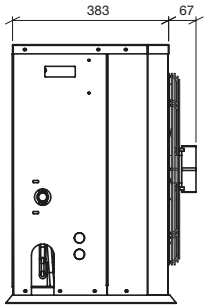

PHYSICAL DATA

Product Code	Model	Figure	Line Size inches		Nett Weight kg	Sound Power Level dBA	Dimensions		
			Suction	Liquid			Length mm	Width mm	Height mm
MEDIUM TEMPERATURE									
3508064	PACS4476Y-EVO	1	1/2"	3/8"	67	68	913	465	638
3508065	PACS4492Y-EVO	1	5/8"	3/8"	67	68	913	465	638
3508066	PAC4492Y-EVO	1	5/8"	3/8"	66	68	913	465	638
3508067	PACS4511Y-EVO	1	5/8"	3/8"	67	68	913	465	638
3508068	PAC4511Y-EVO	1	5/8"	3/8"	66	68	913	465	638
3508069	PACS4518Y-EVO	1	5/8"	3/8"	78	68	913	465	638
3508070	PAC4518Y-EVO	1	5/8"	3/8"	77	68	913	465	638
3508071	PACS4525Y-EVO	1	5/8"	3/8"	79	70	913	465	638
3508072	PAC4525Y-EVO	1	5/8"	3/8"	78	70	913	465	638
3508073	PAC4528Y-EVO	2	7/8"	1/2"	102	72	913	478	800
3508074	PAC4534Y-EVO	2	7/8"	1/2"	102	72	913	478	800
3508075	PAC4537Y-EVO	2	7/8"	1/2"	102	72	913	478	800
3508076	PAC4543Y-EVO	2	7/8"	1/2"	102	72	913	478	800

Figure 2

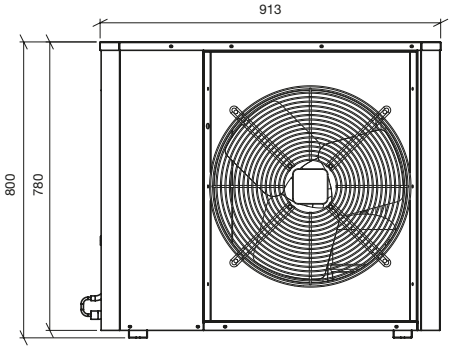

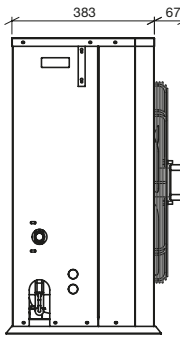

Capacity Data
R134a

MEDIUM TEMPERATURE APPLICATION

Model (R134a)	Ambient Temp. °C	Saturated Suction Temperature: °C								
		-25	-20	-15	-10	-5	0	5	10	15
PACS4476Y-EVO	32	-	499	717	962	1237	1544	1886	2269	2700
	35	-	478	688	924	1189	1486	1819	2192	2613
	38	-	458	659	887	1144	1433	1757	2122	2536
	43	-	-	615	831	1076	1353	1667	2021	2425
PACS4492Y-EVO	32	452	652	894	1181	1518	1908	2357	2871	3459
	35	-	627	859	1135	1460	1836	2272	2774	3349
	38	-	603	824	1091	1404	1771	2195	2685	3249
	43	-	560	769	1022	1321	1673	2083	2556	3104
PAC4492Y-EVO	32	-	626	899	1216	1582	2005	2491	3046	3679
	35	-	581	849	1158	1515	1925	2395	2932	3546
	38	-	536	798	1099	1445	1843	2298	2818	3412
	43	-	459	712	999	1329	1705	2134	2624	3184
PACS4511Y-EVO	32	626	903	1235	1624	2078	2600	3199	3886	4674
	35	-	870	1188	1561	1999	2506	3089	3760	4532
	38	-	836	1140	1502	1926	2419	2989	3646	4404
	43	-	-	1066	1410	1816	2291	2842	3480	4223
PAC4511Y-EVO	32	610	880	1197	1568	1999	2498	3069	3722	4466
	35	-	830	1138	1498	1915	2395	2946	3574	4291
	38	-	781	1079	1428	1829	2292	2821	3426	4115
	43	-	-	982	1309	1686	2118	2612	3175	3818
PACS4518Y-EVO	32	1117	1396	1792	2315	2976	3784	4756	5907	7263
	35	-	1344	1722	2224	2860	3643	4587	5708	7032
	38	-	1293	1653	2137	2753	3512	4431	5527	6823
	43	-	1203	1543	2001	2589	3319	4203	5262	6520
PAC4518Y-EVO	32	1117	1396	1792	2315	2976	3784	4756	5907	7263
	35	-	1344	1722	2224	2860	3643	4587	5708	7032
	38	-	1293	1653	2137	2753	3512	4431	5527	6823
	43	-	1203	1543	2001	2589	3319	4203	5262	6520
PACS4525Y-EVO	32	1138	1592	2207	2959	3858	4918	6155	7588	9245
	35	-	1535	2121	2842	3709	4735	5936	7333	8951
	38	-	1476	2036	2731	3570	4566	5735	7099	8684
	43	-	1374	1901	2559	3359	4314	5440	6760	8299
PAC4525Y-EVO	32	1136	1592	2207	2959	3858	4918	6155	7588	9245
	35	-	1535	2121	2842	3709	4735	5936	7333	8951
	38	-	1476	2036	2731	3570	4566	5735	7099	8684
	43	-	1374	1901	2559	3359	4314	5440	6760	8299
PAC4528Y-EVO	32	1187	1701	2282	3084	3975	5158	6541	8142	9996
	35	-	1651	2216	2994	3820	4967	6308	7868	9678
	38	-	1588	2151	2907	3676	4788	6095	7618	9389
	43	-	1512	2049	2795	3459	4524	5780	7253	8973
PAC4534Y-EVO	32	1221	1912	2762	3784	4991	6400	8031	9911	12071
	35	-	1843	2654	3634	4798	6161	7746	9576	11686
	38	-	1772	2548	3492	4617	5941	7484	9271	11338
	43	-	1650	2378	3272	4345	5612	7099	8828	10836
PAC4537Y-EVO	32	1211	1939	2851	3957	5277	6825	8627	10714	13124
	35	-	1872	2740	3802	5073	6571	8321	10354	12707
	38	-	1801	2633	3654	4882	6337	8040	10024	12329
	43	-	1679	2459	3425	4595	5987	7628	9546	11784
PAC4543Y-EVO	32	1604	2413	3422	4644	6098	7803	9786	12081	14733
	35	-	2325	3287	4460	5861	7511	9437	11673	14263
	38	-	2234	3155	4284	5639	7241	9117	11300	13838
		-	2079	2943	4012	5303	6839	8646	10757	13223

EN13215 ratings: Return gas 20°C, Superheat 15k, Subcooling 3k

Capacity Data
R513A

COMPAC

MEDIUM TEMPERATURE APPLICATION

Model (R513A)	Ambient Temp. °C	Saturated Suction Temperature: °C								
		-25	-20	-15	-10	-5	0	5	10	15
PACS4476Y-EVO	32	388	564	767	1001	1272	1583	1937	2337	2783
	35	-	522	718	945	1205	1506	1847	2233	2664
	38	-	480	668	887	1139	1428	1757	2128	2543
	43	-	409	587	792	1027	1298	1607	1955	2344
PACS4492Y-EVO	32	528	747	1003	1305	1656	2063	2528	3057	3655
	35	483	697	948	1240	1579	1970	2417	2926	3501
	38	-	648	892	1175	1502	1878	2307	2796	3349
	43	-	560	795	1064	1372	1724	2126	2582	3098
PAC4492Y-EVO	32	448	699	983	1305	1671	2085	2554	3084	3679
	35	399	646	924	1238	1593	1995	2448	2959	3534
	38	-	593	865	1171	1515	1903	2341	2834	3387
	43	-	505	766	1058	1384	1750	2161	2621	3138
PACS4511Y-EVO	32	743	1016	1333	1702	2125	2608	3155	3769	4456
	35	691	957	1266	1622	2030	2495	3020	3609	4268
	38	-	898	1198	1542	1935	2381	2885	3449	4081
	43	-	797	1084	1408	1777	2193	2660	3185	3771
PAC4511Y-EVO	32	700	982	1306	1680	2106	2593	3143	3761	4455
	35	648	923	1238	1599	2011	2477	3006	3599	4264
	38	-	864	1170	1518	1914	2362	2868	3436	4073
	43	-	767	1057	1383	1753	2169	2639	3164	3754
PACS4518Y-EVO	32	786	1205	1705	2298	2992	3795	4706	5721	6826
	35	692	1099	1582	2154	2824	3601	4484	5470	6549
	38	-	991	1456	2007	2653	3403	4258	5217	6269
	43	-	811	1245	1759	2365	3068	3877	4787	5795
PAC4518Y-EVO	32	806	1222	1719	2311	3010	3817	4736	5759	6872
	35	722	1124	1603	2172	2843	3623	4510	5502	6585
	38	-	1025	1484	2031	2676	3425	4282	5243	6296
	43	-	862	1289	1794	2394	3093	3898	4806	5810
PACS4525Y-EVO	32	1312	1861	2507	3258	4122	5097	6174	7329	8527
	35	-	1718	2340	3064	3898	4841	5887	7016	8197
	38	-	1574	2172	2870	3672	4584	5599	6703	7867
	43	-	-	1892	2543	3295	4154	5119	6181	-
PAC4525Y-EVO	32	1319	1820	2421	3132	3963	4913	5976	7135	8364
	35	-	1678	2252	2933	3733	4654	5689	6828	8046
	38	-	1540	2087	2740	3508	4398	5406	6525	7733
	43	-	-	1823	2428	3146	3985	4948	6032	-
PAC4528Y-EVO	32	1491	2138	2880	3727	4687	5766	6974	8323	9831
	35	1334	1961	2677	3493	4419	5464	6638	7959	9447
	38	-	1785	2476	3262	4155	5165	6307	7599	9066
	43	-	1489	2143	2882	3721	4675	5764	7008	-
PAC4534Y-EVO	32	1665	2387	3216	4160	5232	6437	7786	9293	10975
	35	1490	2190	2989	3899	4933	6100	7411	8885	10547
	38	-	1993	2764	3642	4639	5766	7040	8484	10121
	43	-	1662	2393	3217	4155	5219	6435	7824	-
PAC4537Y-EVO	32	1687	2479	3377	4398	5552	6851	8312	9960	11834
	35	-	2257	3124	4106	5215	6465	7877	9477	11305
	38	-	2033	2872	3816	4882	6086	7449	9000	10783
	43	-	-	2454	3339	4336	5463	6745	-	-
PAC4543Y-EVO	32	1860	2782	3823	5001	6327	7818	9490	11379	13534
	35	-	2541	3547	4682	5960	7395	9013	10844	12943
	38	-	2299	3273	4367	5596	6979	8540	10314	12358
		-	-	2820	3848	5000	6295	7764	9446	-

EN13215 ratings: Return gas 20°C, Superheat 15k, Subcooling 3k