marbletrend

Specification Sheet

Marbletrend Easy-Fit Polymarble Shower Base

SPECIFICATIONS	
Recommended Use	Domestic, Hotel & Commercial
Material	Polymarble
Colour	White
Waste Position	Rear Centre Waste
Waste type	Square Acrylic Waste Cover
Waste Outlet	Top Fix Waste
Size Variations	900 x 900mm 1200 x 900mm
WARRANTY	
Warranty - Domestic Use	7 Years
Spare Parts & Labour	12 Months
Please refer to Warranty Page for full Terms and Conditions	

To see the complete Marbletrend range go to www.reece.com.au/bathrooms

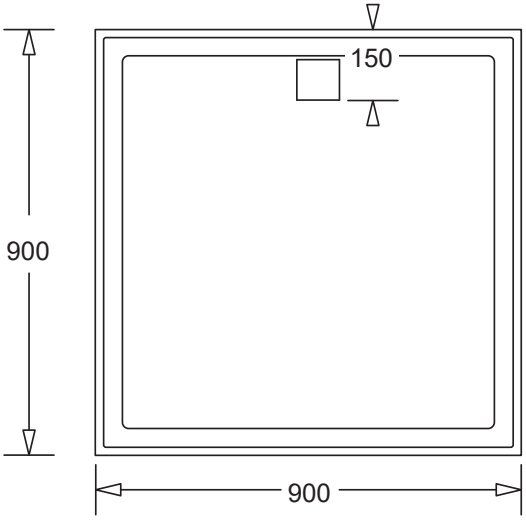

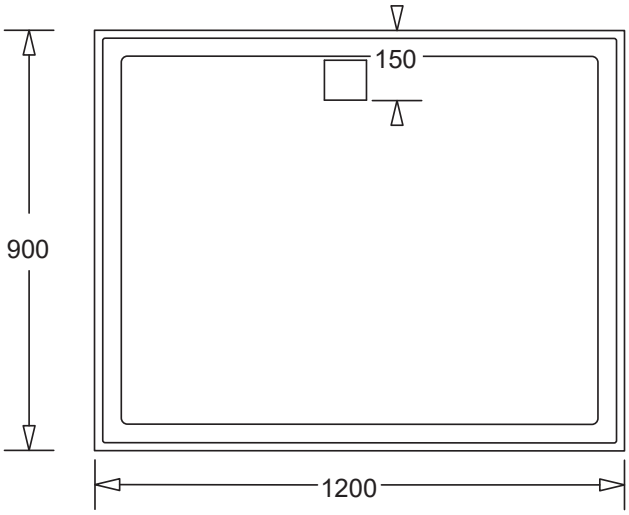

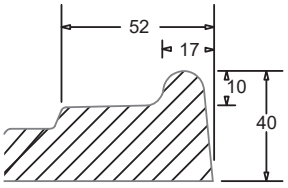

Edge profile

Self supporting 4 Sided tile lip Base

7 YEAR QUALITY GUARANTEE

Dimensions are nominal measurements only.

Disclaimer: Products in this specification manual must by regulation be installed by licensed and registered trade people. The manufacturer/distributor reserves the right to vary specifications or delete models from their range without prior notification. Dimensions are nominal measurements only. Dimensions and set-outs listed are correct at time of publication however the manufacturer/distributor takes no responsibility for printing errors.

Published 20/06/18

reece™