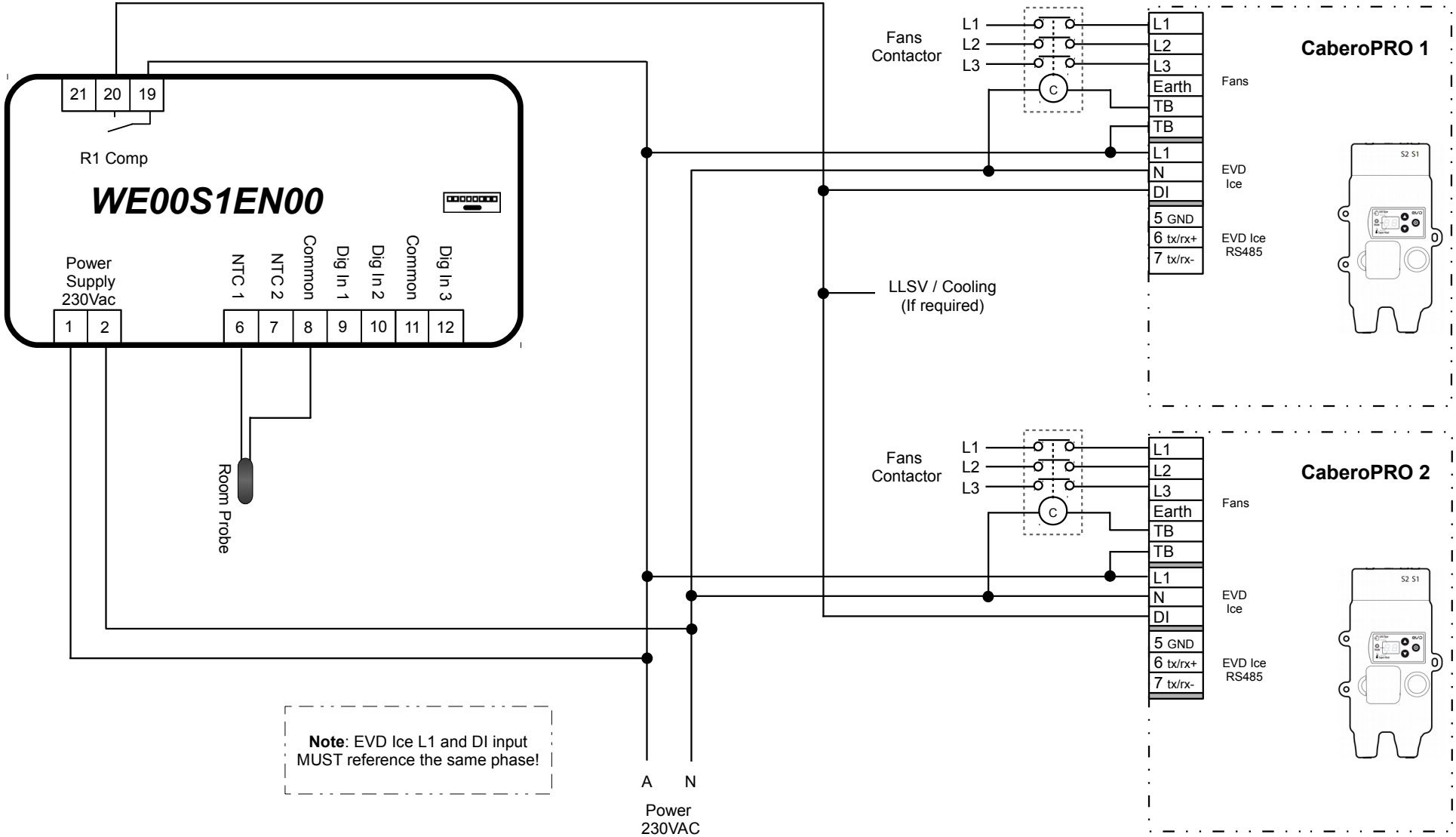

Application Guide:
Smartcella Medium Temp,
2 x CaberoPRO CH,
with 500mm Fans

CAREL

Phone 02-8762 9200
Email cst.au@carel.com

Part number	Description
WE00S1EN00	Smartcella, M/T single output, 230V
NTC030HP03	Carel NTC Sensor, 3m
+0300038EN	EVD Ice user manual
+0300084EN	Smartcella user manual

Drawn by: BF Date: 01/03/2018

Checked by: SS Date: 05/03/2018

Drawing: Smartcella_MT_2x_CH_CaberoPRO_500mm_Fans

Rev: 2.0

Connected

NOT Connected

Normally Open contact

Normally Closed contact

PARAMETERS
St = Set point
rd = Differential
A0 = Alarm differential
A1 = Alarm type (0 = relative, 1 = absolute)
AL = Low alarm threshold
AH = High alarm threshold
Ad = Alarm delay (mins)

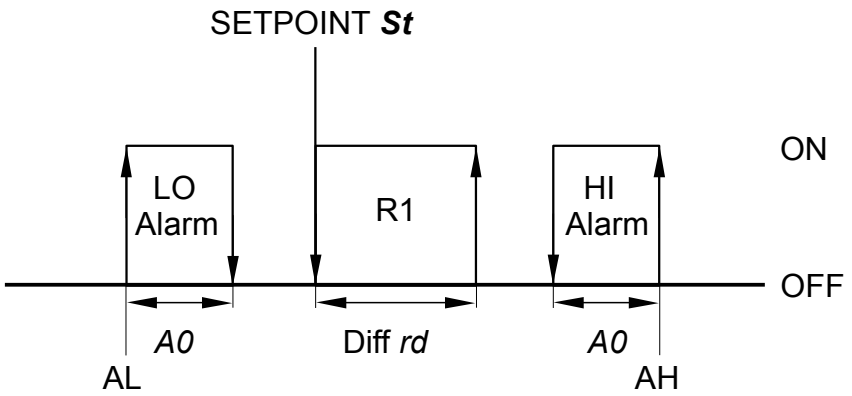

CAREL
Phone 02-8762 9200
Email cst.au@carel.com

Part number	Description
WE00S1EN00	Smartcella, M/T single output, 230V
NTC030HP03	Carel NTC Sensor, 3m
+0300038EN	EVD Ice user manual
+0300084EN	Smartcella user manual

Drawn by: BF Date: 01/03/2018

Checked by: SS Date: 05/03/2018

Drawing: Smartcella_MT_2x_CH_CaberoPRO_500mm_Fans
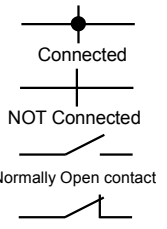
Rev: 2.0