# Folding Shower Seat With Legs

## Model RBA4157-777-003

### Materials & Features

RBA folding shower seats are designed to suit all requirements of AS1428.1-2009 when installed correctly. Unit is slip-resistant, self-draining and support legs extend to the floor for increased stability. Seat is secured to frame from underneath to eliminate fixings on the seat top for improved comfort and infection control. Seat folds in an upwards direction.

### Technical Detail

| | |
|---|---|
| Frame: | 1.2mm x 25mm x 25mm, 304 Stainless Steel, Satin Finish |
| Seat: | One-piece, 12mm phenolic |

### Related Products

| | |
|---|---|
| **RBA4110-926** | Shower 'T' Rail with Handset, Slider & Hose, RH |
| **RBA4177-927** | Shower 'T' Rail with Handset, Slider & Hose, LH |
| **RBA4110-991** | Straight Shower Rail with Handset, Slider & Hose, 900mm |

### Installation

Warning: Folding Shower Seats are no stronger than the anchors or walls to which they are attached and therefore must be firmly secured in order to support the loads for which they are intended.

**Important:** Installation instructions and current rough-in details should be furnished with each fixture. Do not rough in without certified dimensions. Dimensions are subject to manufacturer's tolerance of +/-10mm.

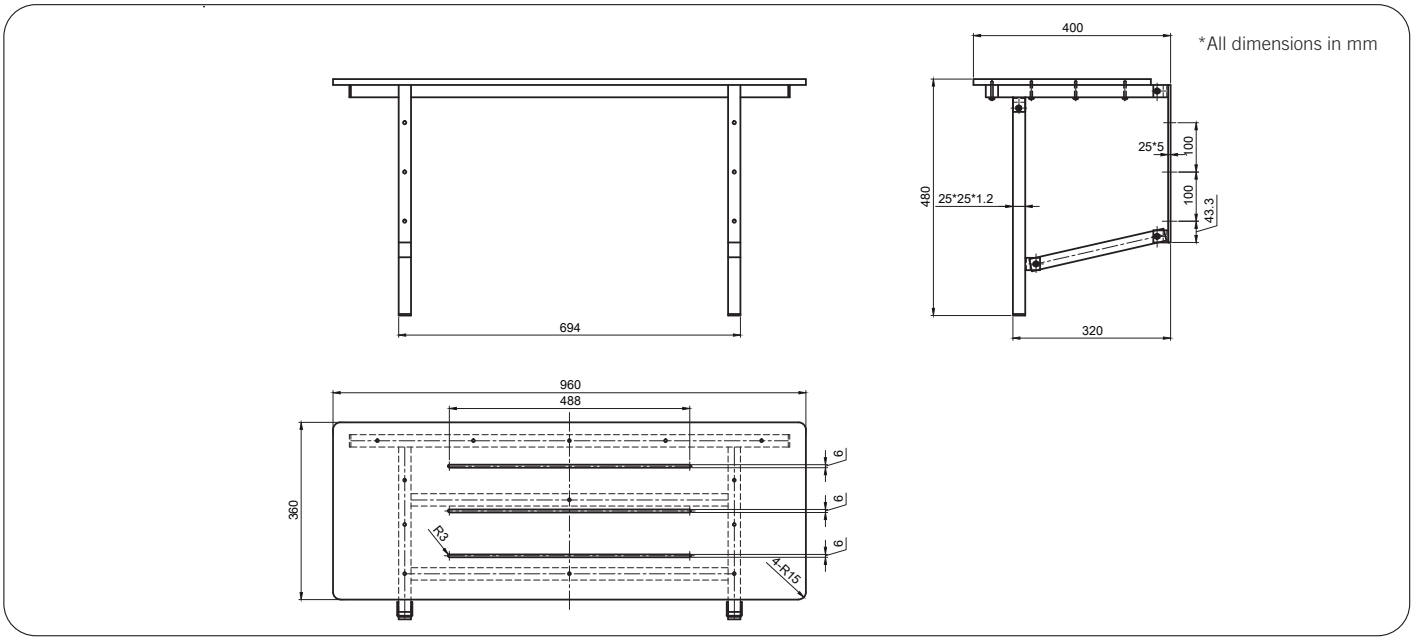


As improvements in the design and performance of RBA products are continuous, specifications may be subject to change without notice.
The illustrations and descriptions herein are applicable to production as of the date of this Technical Data Sheet. Revised 06/21 © 2021 by RBA Group TD/Model RBA4157-777-003/0621



SYDNEY | MELBOURNE | BRISBANE | PERTH | AUCKLAND
**Australia** 1300 788 778 www.rba.com.au | **New Zealand** 0800 722 111 www.rbagroup.co.nz