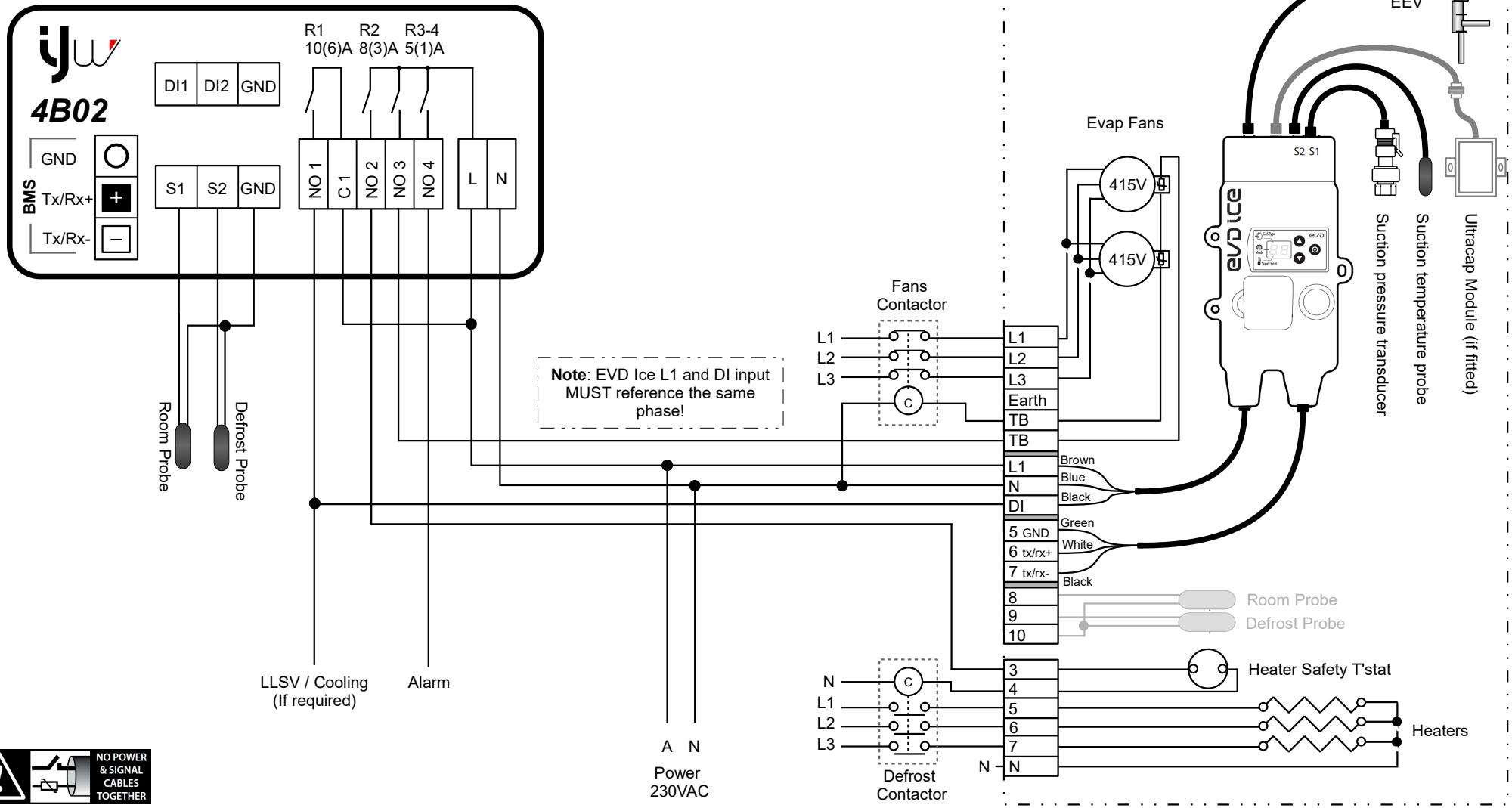

Wizard setup #421

Application Guide:
iJW 4B02 #421 Low Temp, CHE CaberoPRO, with 500mm Fans

CAREL SERVICES

Phone 02-8762 9200
Email services.au@carel.com

Part number	Description
IJWPSA4B02S0523	iJW 4B02, L/T 4 output,115-230V NFC RTC BT MODBUS
NTC030HP03	Carel NTC Sensor, 3m
SPKT0013P0	Pressure transducer -1.0 - 9.3bar ratiometric 0-5V
+0300103EN	iJW user manual

Drawn by: Pv Date: 30/03/2023

Checked by: MK Date: 30/03/2023

Drawing: iJW 4B02 #421 Low Temp, CHE CaberoPRO 500mm Fans

Rev: 1.0

Connected
NOT Connected
Normally Open contact
Normally Closed contact

iJWizard

	IS = 421 Wizard code selection
	A5 = 0 DI2 config
	/P1 = 2 Probe type 2 = NTC

*KEYPAD PARAMETERS**

CtL/ Control	**St** = Set point
	rd = Differential
dEF/ Defrost	**d0** = Defrost type 0=heater/temp, 1=hot gas/temp, 2=heater/temp, 3= hot gas/time, 4=heater/time w/ temp control
	d1 = Intervals between defrosts (hours)
	dP1 = Maximum defrost duration
	dt1 = Defrost termination temp.(Sd)
FAn/ Fan	**F2 =** 0 Fans on except in defrost
ALM / Alarm	**A1** = Alarm type (0 = relative, 1 = absolute)
	AH = Relative high alarm threshold
	AL = Relative low alarm threshold
	AHA = Absolute low alarm threshold
	ALA = Absolute high alarm threshold
	Ad = Alarm delay (mins)

evDice

GAS Type	0= Custom	11= R744*	22= R407F	33= R448A
	1= R22	12= R728	23= R32³	34= R449A
	2= R134a	13= R1270	24= HTR01	35= R450A*
	3= R404A	14= R417A	25= HTR02	36= R452A*
	4= R407C	15= R422D	26= R23	37= R508B*
	5= R410A	16= R413A	27= R1234yf	38= R452B
	6= R507A	17= R422A	28= R1234ze*	39= R513A*
	7= R290	18= R423A	29= R455A*	40= R454B
	8= R600*	19= R407A	30= R170*	41 = R458A
	9= R600a*	20= R427A	31= R442A*	
	10= R717	21= R245FA	32= R447A*	
Mode	Operation Mode (by default “Mode” is inaccessible, see parameter IA): 1= Cabinet /Coldroom 2-6= not used 7= Cabinet/ Coldroom with subcritical CO2			
Superheat	Superheat Setpoint (K)			

**If selected it can change the transducer default setting, check S1.*

APPLICA

**for full parameter access with APPLICA app.*

Wizard setup #421

Application Guide:
iJW 4B02 #421 Low Temp, CHE CaberoPRO, with 500mm Fans

CAREL SERVICES

Phone 02-8762 9200
Email services.au@carel.com

Part number	Description
IJWPSA4B02S0523	iJW 4B02, L/T 4 output,115-230V NFC RTC BT MODBUS
NTC030HP03	Carel NTC Sensor, 3m
SPKT0013P0	Pressure transducer -1.0 - 9.3bar ratiometric 0-5V
+0300103EN	iJW user manual

Drawn by: Pv Date: 30/03/2023

Checked by: MK Date: 30/03/2023

Drawing: iJW 4B02 #421 Low Temp, CHE CaberoPRO 500mm Fans

Rev: 1.0

Connected

NOT Connected

Normally Open contact

Normally Closed contact