Components List

Milli Etch Progressive Shower Mixer Tap Matte Black

21781

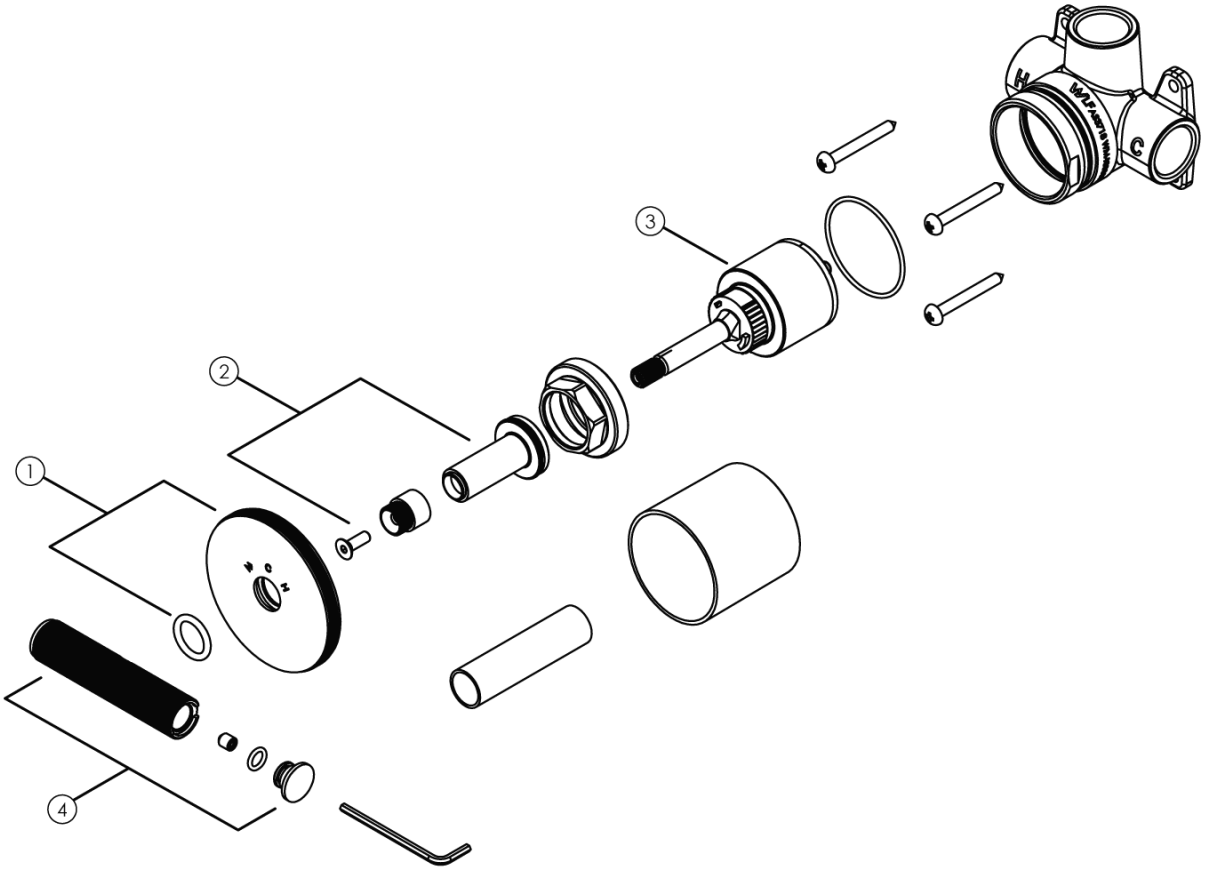

No.	Description	Code
1	Milli Etch Hob Mixer Progressive Dress Plate Assy	30053
2	Milli Etch Wall System Spline & Sleeve Assy	30110
3	Milli Etch WSS Progressive Cartridge GN-35P-SQM	29967
4	Mill Etch WSS Progresive Mixer Handle Assy	30077