Components List

Milli Etch Progressive Hob Basin Mixer Tap Set Brushed Gunmetal (3 Star)

21778

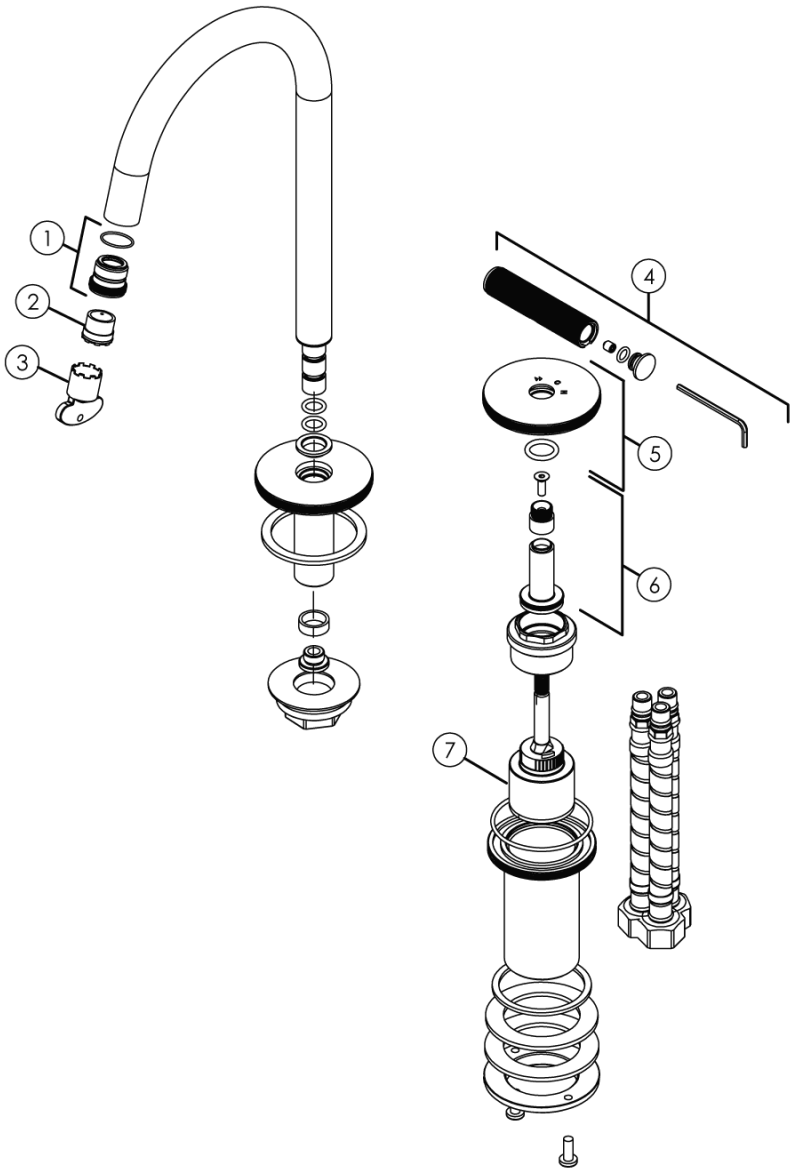

No.	Description	Code
1.	Milli Etch Basin/Bath Wall Retainer 19mm Assy	29887
2.	Neoperl Cache TT 1.0 GPM	44.3258.010
3.	Neoperl Cache TT Aerator Key 16mm	09.9170.0
4.	Mill Etch WSS Progresive Mixer Handle Assy	30080
5.	Milli Etch Hob Mixer Progressive Dress Plate Assy	30056
6	Milli Etch Wall System Spline & Sleeve Assy	30113
7.	Milli Etch WSS Progressive Cartridge GN-35P-SQM	29967