KADO

Kado Lussi Freestanding Bath

Important:

• Please unwrap the bath and check it carefully to ensure it has not been damaged in handling or transport.

• Please check that all parts have been supplied.

• Assemble bath on a mat to protect against damage to bath surface.

• Please do not remove the old fixture before you unpack and inspect the new unit.

• Store the bath in a safe place until you begin installation to avoid damage.

• Any installation should be carried out by a qualified tradesman with knowledge of statutory plumbing requirements in your area.

• This product requires a four person lift – use proper lifting techniques.

• **This installation guide does not include details of waste connection**; final decision about installation of waste connection & cutout allowance in floor for connection, should be taken by a suitably qualified person.

• Install waste pipe and trap - taking into consideration the waste position of the bath. Make sure that the surface where the bathtub will be placed is perfectly flat, clean, free of any excess humidity and offers adequate support.

A suggested bath component list for Slab floor or 2nd storey bath connection or Timber floor with clear access underneath is listed below:

1. Slab floor or 2nd storey suggested bath connection component list:

- 1405525 DWV Adaptor PVC X Fl 40mm
- 1400105 40mm DWV PVC pipe (installer to cut to length)
- 1400155 Smart Seal D101 seal
- 1400140 Smart Pan
- 1400146 DWV Smart Trap 100 X 50mm

2. Timber floor with clear access underneath:
   Connection of bath waste to 40mm P-Trap in timber sub-floor is acceptable when clear access is available under the floor.

- 1409115 Dura Standard P Trap 40mm or 1409121 Dura Short P Trap 40mm
- 1400105 40mm DWV PVC pipe (installer to cut to length)

Plumbers, please ensure a copy of the installation instructions is left with the end user for future reference.

Published on 14/04/2023

reece™

KADO

Kado Lussi Freestanding Bath

- **Bath Waste**

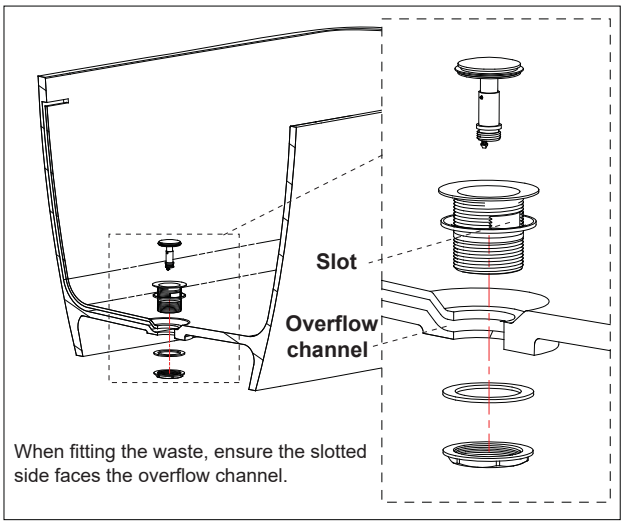

When fitting the waste, ensure the slotted side faces the overflow channel.

Below floor smart trap

Below floor smart pan

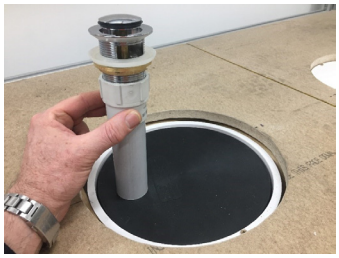

Waste pipe into smart seal

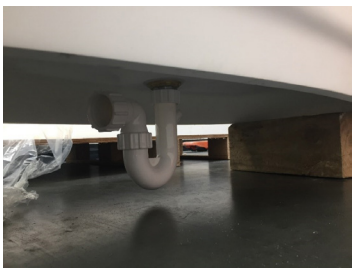

P-Trap

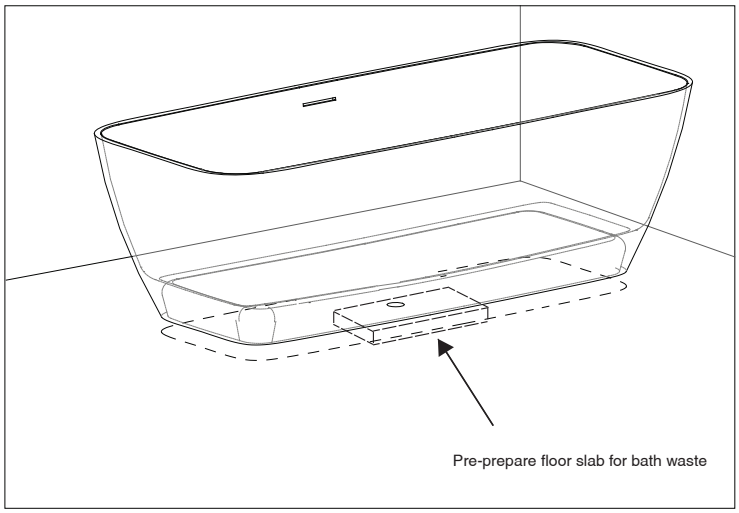

Plumbers, please ensure a copy of the installation instructions is left with the end user for future reference.
Published on 14/04/2023

KADO

Kado Lussi Freestanding Bath

9506953

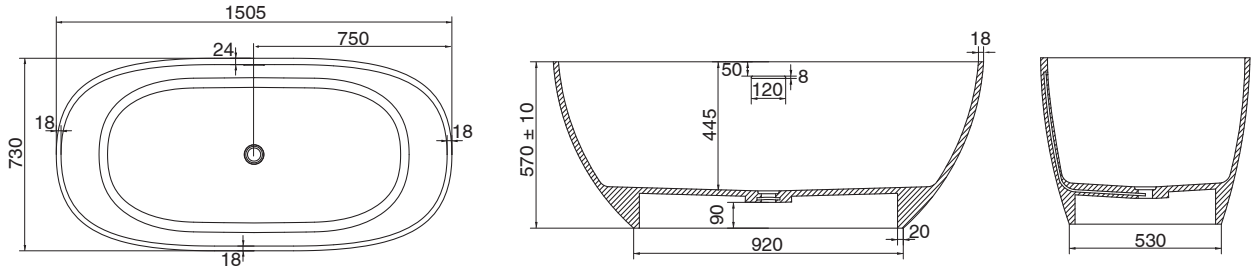

9506954

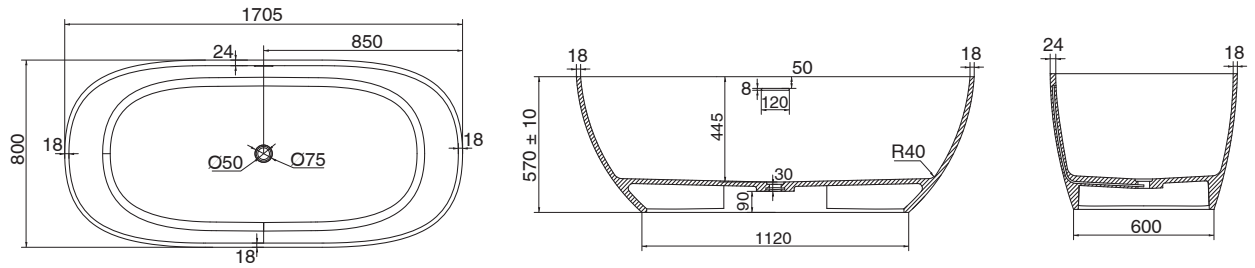

9509631

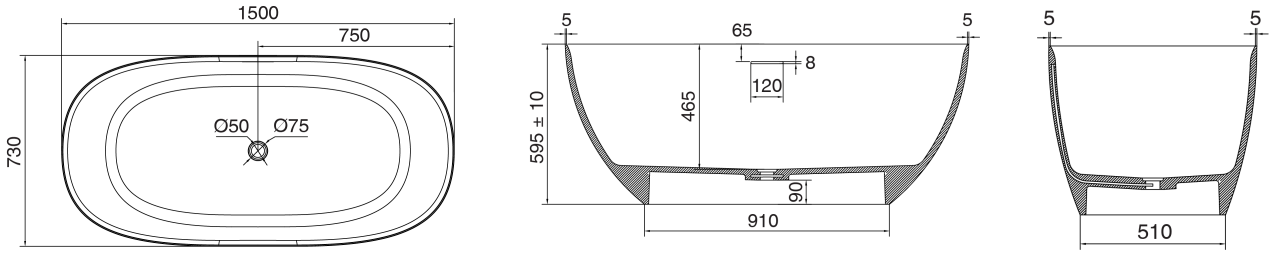

9509632

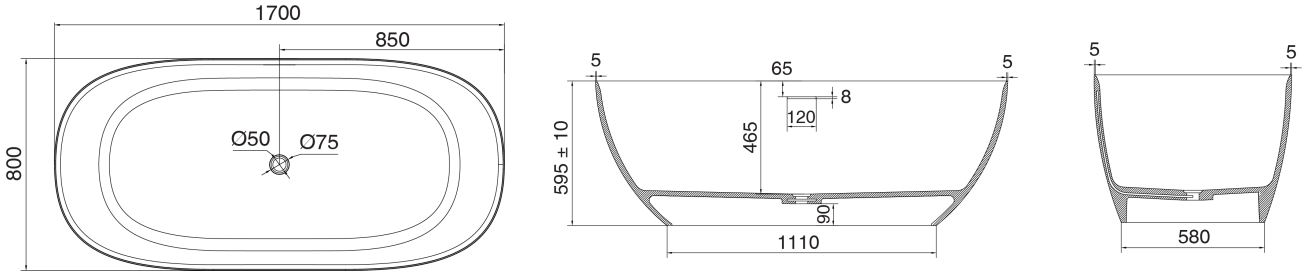

Dimensions are nominal measurements only.

Plumbers, please ensure a copy of the installation instructions is left with the end user for future reference.

Published on 14/04/2023

KADO

Kado Lussi Freestanding Bath

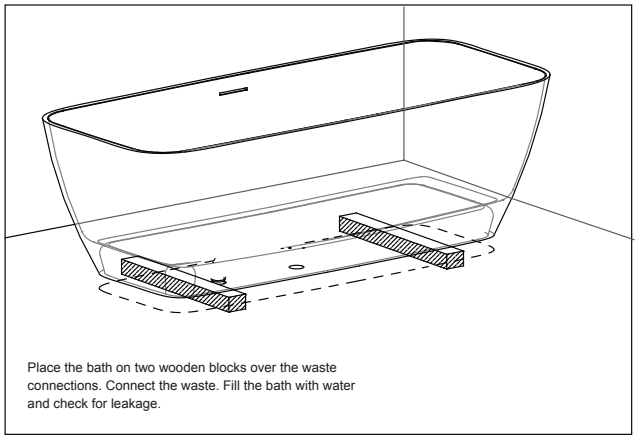

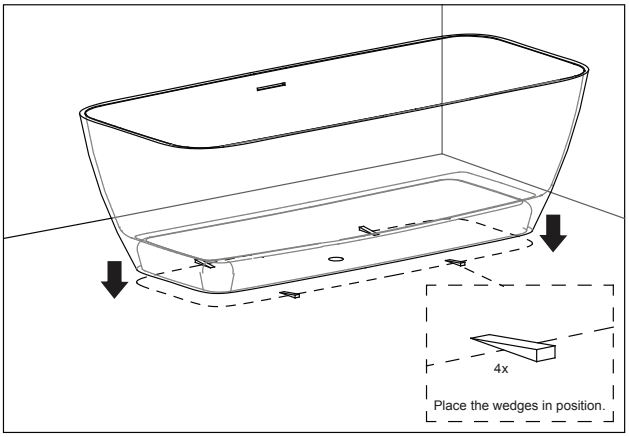

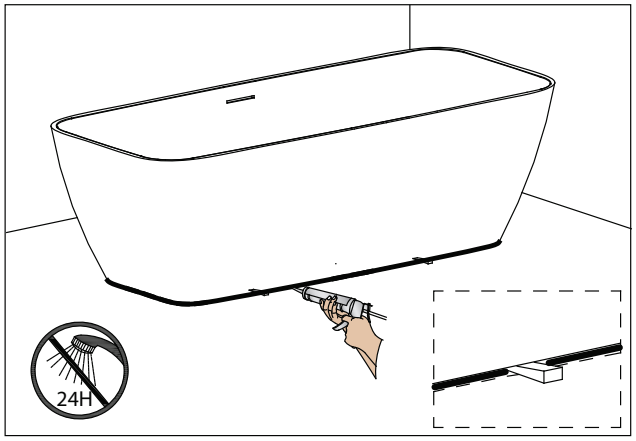

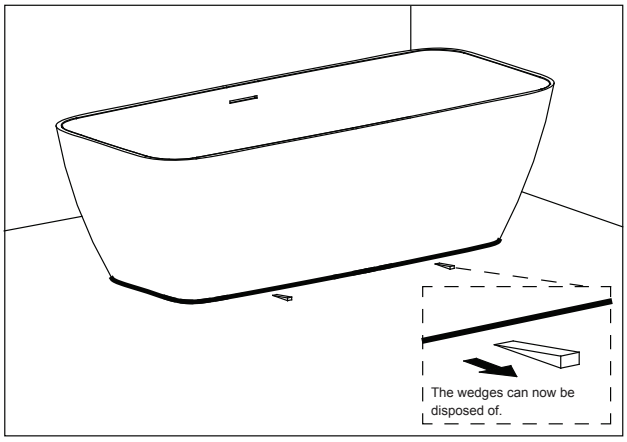

Care and Maintenance:

- Repairing a scratch: If any scratches occur during installation these can be removed by rubbing with a 1500+grit waterproof abrasive paper and water.
- Repolish the surface afterwards using a neutral automotive colour restorer or household metal polish. For best results limit sanding to the smallest possible area around the scratch.
- It may be possible to polish very fine scratches away without using abrasive papers: scrubbing gently with a soft brush or plastic pad (not metal scouring pad) and a mildly abrasive cream cleaner. Afterwards scrub the whole area with plenty of clean water and re-polish as before.

Everyday cleaning

- For general cleaning use soapy water or an approved cleaner for solid surfaces.
- For a deeper periodic clean, to maintain the matte surface a cleaning and maintenance kit is supplied.
- Damage caused by any improper treatment is not covered by the product warranty. Refer to Warranty Conditions.

Plumbers, please ensure a copy of the installation instructions is left with the end user for future reference.

Published on 14/04/2023

reece