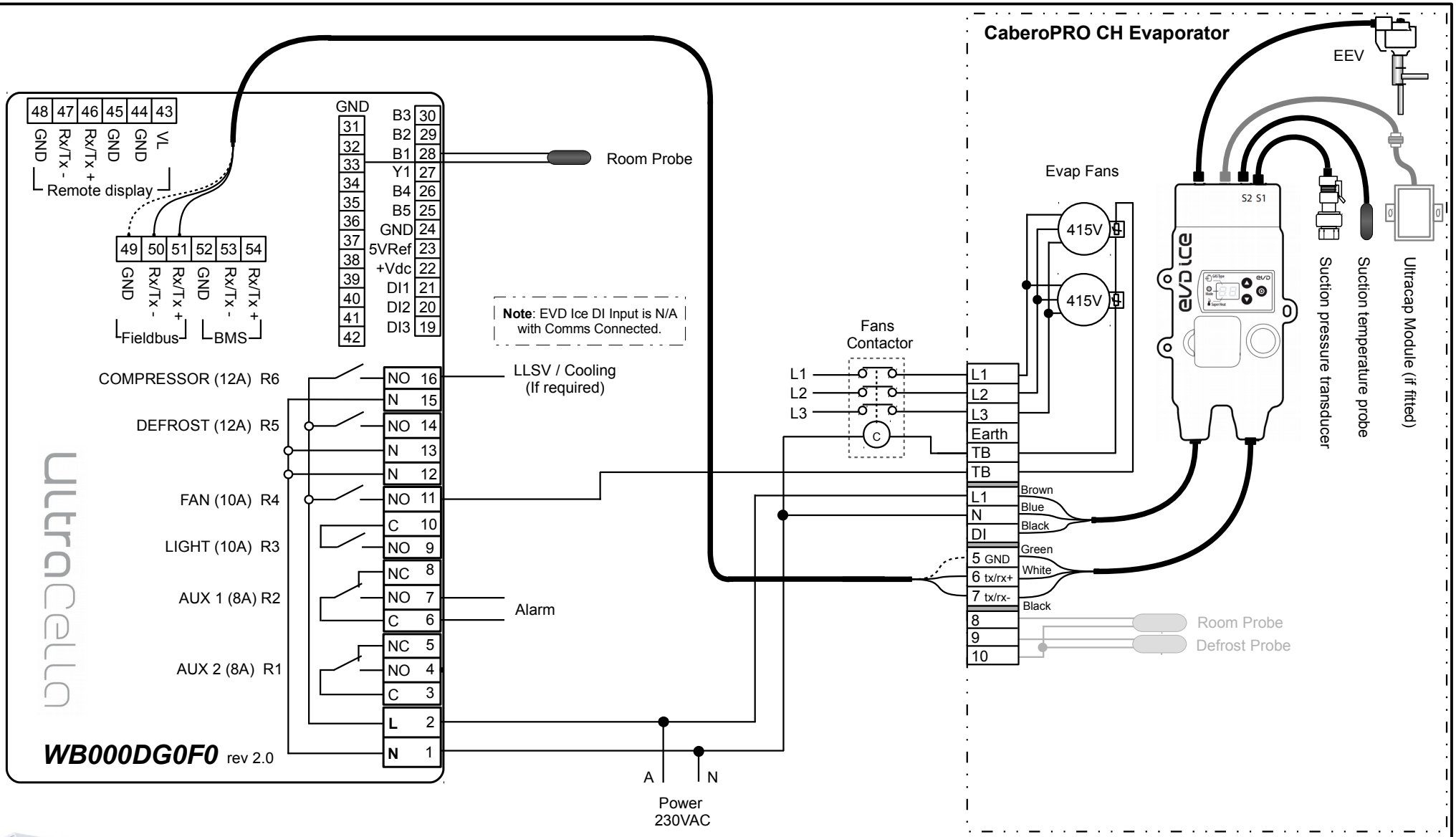

Application Guide:
Ultracella Medium Temp,
CaberoPRO CH,
with 500mm Fans

CAREL

Phone 02-8762 9200
Email cst.au@carel.com

Part number	Description
WB000DG0F0	UltraCella double display, revision 2.0
NTC030HP03	Carel NTC temperature sensor, 3m
PGDEWB0FZK	Ultracella service pGD tool
+0300083EN	UltraCella user manual

Drawn by: BF Date: 01/03/2018

Checked by: PV Date: 08/03/2018

Drawing: Ultracella_MT_CH_CaberoPRO_500mm_Fans

Rev: 2.0

Connected
NOT Connected
Normally Open contact
Normally Closed contact

Ultracella Parameters	
1. Probes (PRO)	**10. Door & Lights (doL)**
/t2 = 21 Display Superheat	**A3** = Disable door switch 1 = Disabled
/A2 = 0 Disable defrost probe B2	**14. EVD ICE (ICE) ***
2. Control (CtL)	**IPE** = 1 Enable EVDice Driver
St = Setpoint	**PH** = Refrigerant type ** 1 = R22, 2 = R134a 3 = R404A, 4 = R407c, 11 = R744
rd = Differential	**tr1** = Enable temperature data logging. 3 = Regulation probe
4. Defrost (dEF)	**IrE** = 1 EEV Application (Cold Room)
d0 = Defrost type 2 = electric/time	**IP3** = 6 Superheat Setpoint
dI = Defrost intervals (hrs)	**IS1** = 3 Pressure sensor used (3 = standard supply -1.0 to 9.3 bar)
dP1 = Max defrost duration (min)	**IC1** = 2K Low superheat threshold
5. Alarm (ALM)	**IC3** = L.O.P. set as SST Coolroom set as -12 Freezer set as -35
A1= Alarm type 0 = relative, 1 = absolute	**IC5** = 15 M.O.P. set as SST
AL = Alarm low threshold	**IIA** = 1 Disable operation mode on EVD Ice (1 = Disable, recommended)
AH = Alarm High threshold	**IU4** = 40% Valve opening position on start up
Ad = Alarm delay (min)	**ICG** = 1 Enable EVD Ice regulation
6. Evaporator Fan (Fan)	
F0 = Fan management 4 = Fan always On	
7. Configuration (CnF)	
H0 = Serial address	
H1 = 1 Aux 1 Alarm Output	
tr1 = Enable temperature data logging. 3 = Regulation probe	
trc = Sample time for recording (min)	

* Once connected to the EVD Ice via communication, it is not necessary to set any parameters at the EVD Ice itself. It can be programmed at the Ultracella.

** Refer to the manual for full refrigerant selections

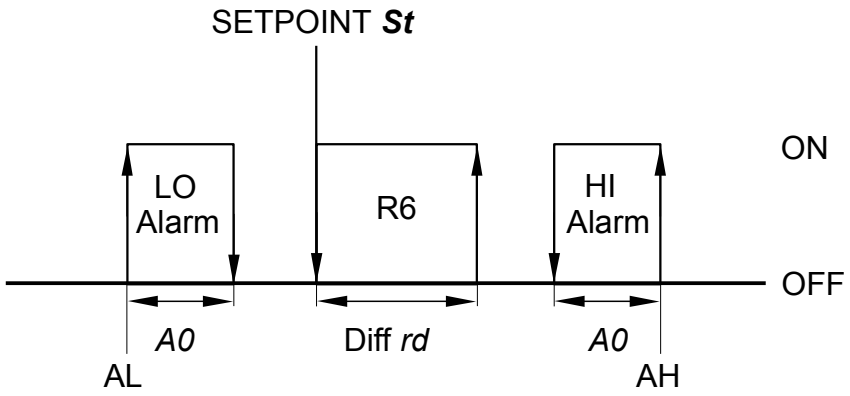

Comissioning Tool:
PGDEWB0FZK

How to retrieve the data log with USB:

1/ Insert a USB into the Ultracella

2/ Press 'PRG' and 'Set' until the display shows 'HcP', then scroll to 'LoG'.

3/ Press 'Set' to confirm the download, the display will flash 'LoG' during the download.

4/ Press 'PRG' until you exit the menu, remove the USB.

CAREL
Phone 02-8762 9200
Email cst.au@carel.com

Part number	Description
WB000DG0F0	UltraCella double display
NTC030HP03	Carel NTC temperature sensor, 3m
PGDEWB0FZK	Ultracella service pGD tool
+0300083EN	UltraCella user manual

Connected
NOT Connected
Normally Open contact
Normally Closed contact

Drawn by: BF Date: 01/03/2018

Checked by: PV Date: 08/03/2018

Drawing: Ultracella_MT_CH_CaberoPRO_500mm_Fans

Rev: 2.0