memo

Specification Sheet

Memo Freya Single Bowl Sink 1 Taphole Right Hand Bowl with Drainer Granite White

2406976

SPECIFICATIONS	
Recommended Use	Domestic;Commercial;Hotel
Bowl Type	Inset / Semi Inset
Material	Quartz Composite
Sink Colour	White
Taphole Options	One
Capacity (L)	34
Mounting	Product Surface
Overflow Included	No
Plug & Waste Included	Yes
Plug & Waste Size	90mm Basket Waste
WARRANTY	
Warranty - Domestic Use	30
Spare Parts & Labour	1
Please refer to Warranty Page for full Terms and Conditions	

Sinks must be installed using a cutout template.
No responsibility will be taken for damage that occurs where a template has not been used.

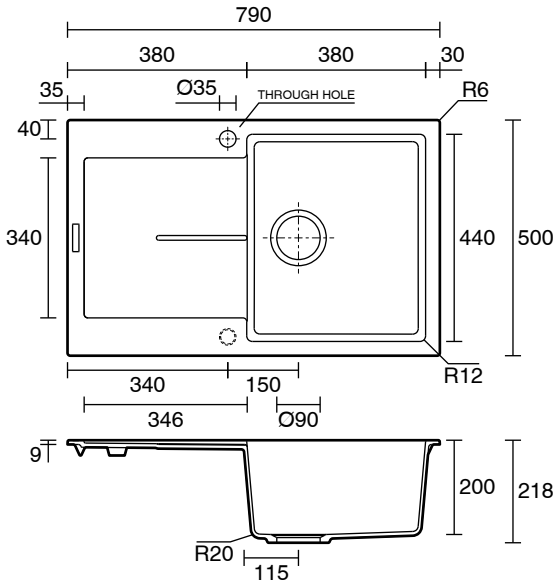

Dimensions are nominal measurements only.

CLEANING RECOMMENDATIONS:
We recommend the use of soapy water or approved cleaners. This product should not be cleaned with abrasive materials. Damage caused by any improper treatment is not covered by the product warranty. Refer to Warranty Conditions

Disclaimer: Products in this specification manual must by regulation be installed by licensed and registered trade people. The manufacturer/distributor reserves the right to vary specifications or delete models from their range without prior notification. Dimensions are nominal measurements only. Dimensions and set-outs listed are correct at time of publication however the manufacturer/distributor takes no responsibility for printing errors.

Published 16/12/2025

To see the complete Memo range go to
www.reece.com.au

reece