NOTE : FASCO AUSTRALIA IS HAPPY TO PROVIDE TECHNICAL ASSISTANCE TO OUR CUSTOMERS IN MANY AREAS. HOWEVER, SINCE FASCO AUSTRALIA IS NOT AWARE OF ALL DATA CONCERNING THE USE AND APPLICATION OF THIS MOTOR, THE SUITABILITY OF THE MOTOR FOR THE APPLICATION MUST BE DETERMINED BY AND IS THE RESPONSIBILITY OF THE CUSTOMER.

MOTOR SPECIFICATION

CUSTOMER				
CUSTOMER P/N				
QR No.		CAPACITOR	uf / V	
POWER OUTPUT	60W	START	NIL	
MOTOR TYPE	SH/POLE	RUN	NIL	
SUPPLY	VOLTS	HERTZ	PHASE	POLES
	240	50	SINGLE	4
ENCLOSURE	TOTALLY ENCLOSED			
SPEED (RPM) AT RATED OUTPUT	1300	WINDING TYPE		
ROTATION	CLOCKWISE (DRIVE END)			
INSULATION CLASS	E 120	DUTY	AOM	
THERMAL PROTECTION	AUTO RESET			
RATED CURRENT	1.0	AMPS AT RATED OUTPUT		
APPLICATION	FAN DRIVE			
MOUNTING	TAPPED HOLES IN ENDSHIELD			
BEARING & LUBRICATION	608ZZ WIDE RANGE, LONG LIFE			
SUPPLY LEAD	COLOUR	PVC GREY		
☑ MULTI STRAND	LENGTH	750^{+50}_{-0} LONG 45 ±5 STRIPPED		
☐ SINGLE CORE	TERMINATION	BOOTLACES		
	Q.C. HOUSING	NIL		
EARTH PROVISION	VIA SUPPLY LEAD			
BASIC BUILD SPECIFICATION				
PERFORMANCE SPECIFICATION				
SHAFT MATERIAL	MILD STEEL			
CONNECTION DIAGRAM	NIL	PAINT SPEC	NIL	

ROTOR END RINGS	
ALUMINIM GRADE	BP170
RADIAL SKEW ANGLE	25° ±1.0°
END RING No.1 DRAWING	306-073-31
END RING No.2 DRAWING	306-073-30
WINDING	
WIRE	0.40PEI-2
TURNS	350
OHMS	31.7

SPECIAL REQUIREMENTS

1) PLACE IN PLASTIC BAG AND ATTACH TO LEAD
   4 - SCREWS 3/16" BSW x 8.0mm PAN POSI HD.
   4 - SHAKEPROOF EXTERNAL WASHER 5mm I.D.
2) RUST PREVENTATIVE TO BE APPLIED TO MILD STEEL SHAFTS AFTER ASSEMBLY.
3) 6-MOTORS IN PLAIN BOX.

DO NOT SCALE PRINT

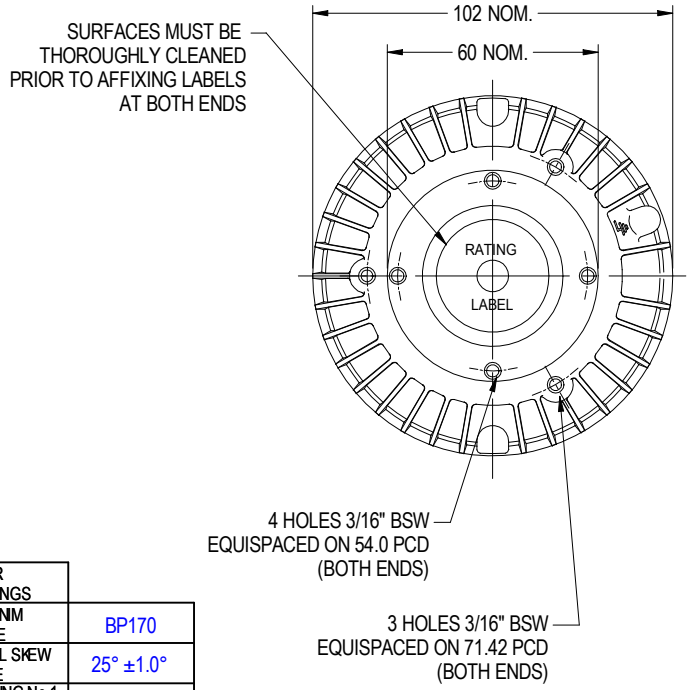

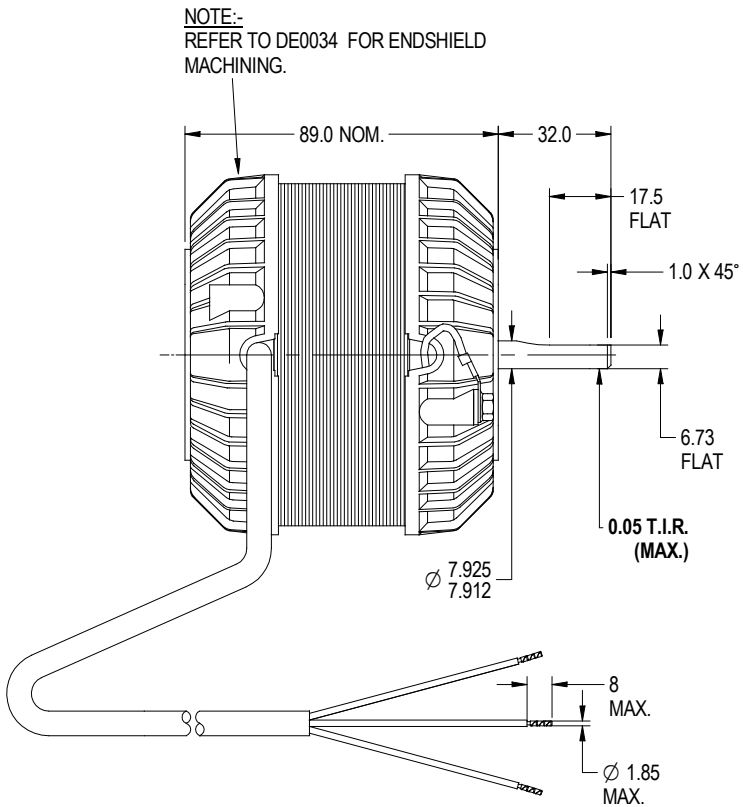

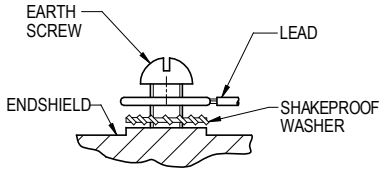

Q.C. EARTH POINT

MIC No. 002908 | By: MURFETTR Date: 05/06/07 | MIC Note: UPDATED

DIMENSIONS IN mm UNLESS OTHERWISE SPECIFIED
GENERAL TOLERANCES
LINEAR: X = ±1.0, X.X = ±0.25, X.XX = ±0.1
ANGULAR: X = 2°, X.X = ±0.5°
SURFACE FINISHES MAX 3.0 MICRO METRES SYMBOLS PER A.S. 1100

This drawing remains the property of Fasco Australia Pty. Ltd. No part or parts of this drawing may be reproduced without written permission.

MAT'L		
FINISH		
DRAWN	MURFETTR	07/05/07
CHECKED	BALCHANT	05/06/07
RELEASED	BALCHANT	05/06/07
SCALE	NTS	

FASCO AUSTRALIA
ABN 000 76 010 944
1/14 Monterey Road, Dandenong, Victoria

FRAME
STATUS R
SHEET A3

MOTOR-
4P 60W

DWG. NO. 50D505-61CT.

REVISION B