KDD 10/10 750W 4P-1 3SY

VOLT	220 - 240	**Ph**	1			**SL.**	KDD10014.1
WATT	750	**Hz**	50			**Part no.**	CAD0S753-00-00
RPM	1300/1250/1200	**Cl.**	F	**uF/V**	20/450	Date	04/08/04
POLE	4	**Temp.**	min - 20°C	**M. Amp**	6.5/5.9/4.8	**Weight**	20 kg
IP	20		max +40°C				

Wiring diagram

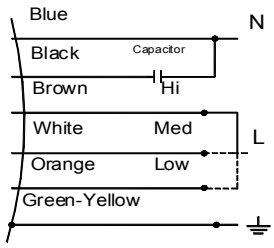

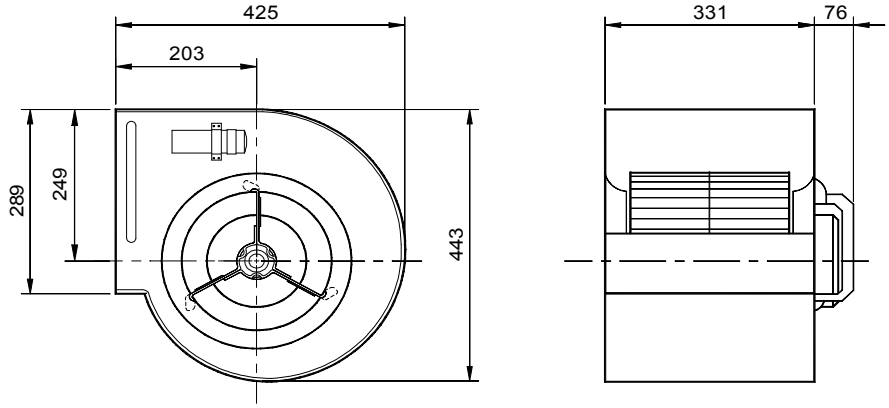

All Dimension in mm

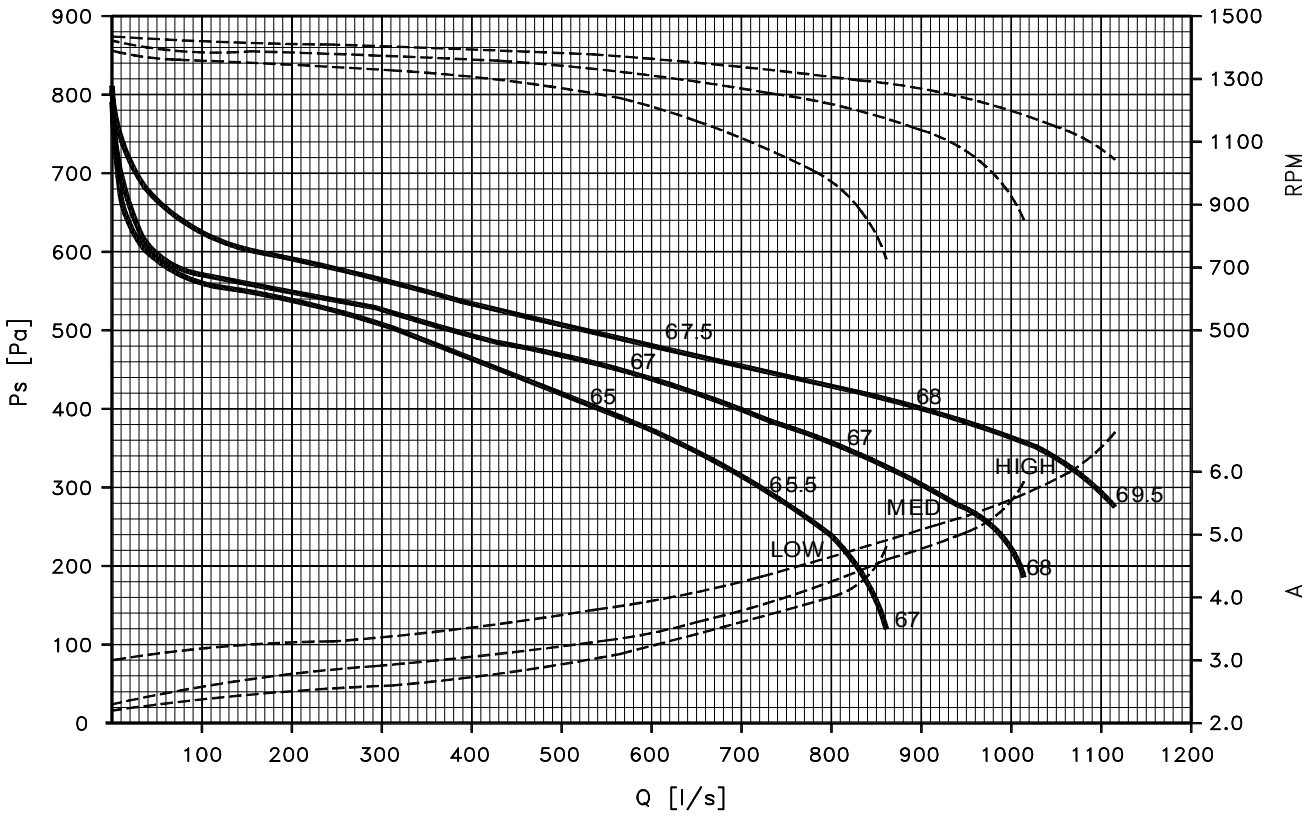

* Sound Lp(A) at 1 m.