Specification Sheet

SUSSEX

Sussex Pure Progressive Column Shower Mixer System 250mm Handshower with Cirque Textured Handles Chrome (3 Star) Lead Free

50211

SPECIFICATIONS	
Recommended Use	Residential;Commercial
Colour Finish	Polished Chrome
Primary Material	Lead Free Brass
Recommended Pressure Range	150 - 500 kPa as per AS3500
Max Continuous Working Temperature (deg C)	65
Min Continuous Working Temperature (deg C)	1
WARRANTY	
Residential Use (Years)	40
Commercial Use (Years)	10
Please refer to Sussex Warranty page for full Terms and Conditions	

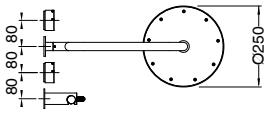

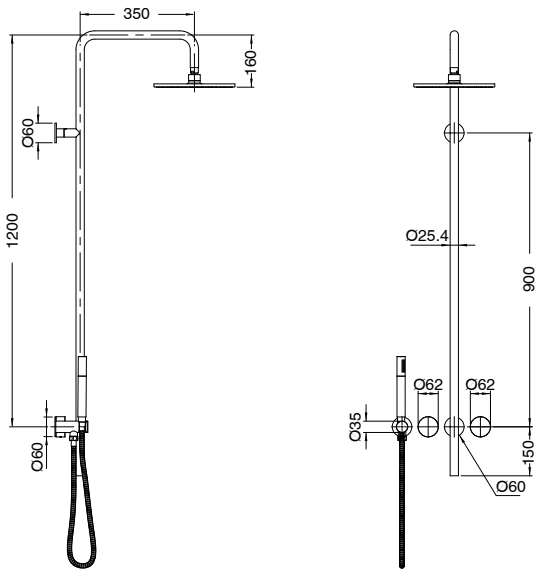

Dimensions are nominal measurements only.

CLEANING RECOMMENDATIONS:

We recommend the use of soapy water or approved cleaners. This product should not be cleaned with abrasive materials. Damage caused by any improper treatment is not covered by the product warranty. Refer to Warranty Conditions

WaterMark
AS/NZS 3662
WMKT25562

Disclaimer: Products in this specification manual must by regulation be installed by licensed and registered trade people. The manufacturer/distributor reserves the right to vary specifications or delete models from their range without prior notification. Dimensions are nominal measurements only. Dimensions and set-outs listed are correct at time of publication however the manufacturer/distributor takes no responsibility for printing errors.

Published 12/05/2026

To see the complete Sussex range go to
www.reece.com.au

reece