BAU COSMOPOLITAN E
HOB MOUNTED SENSOR TAP
MODEL #36471000

Pure Freude an Wasser

GROHE

Product Specifications

Product description

Bau Cosmo E
Touchless Electronic Tap
Turns water on and off automatically when infrared sensor detects hand motion
Touchless, hands-free operation provides safer, more hygienic experience
Water will run for 60 maximum of 60 seconds per cycle
Separate inner water ways within the tap to prevent lead and nickle contamination for clean drinking water
Grohe Long-life finish
Battery powered, includes CR-P2 lithium battery with 7-year life (expected) based on 150 uses per day
Optional remote control accessory (36407) sold separately

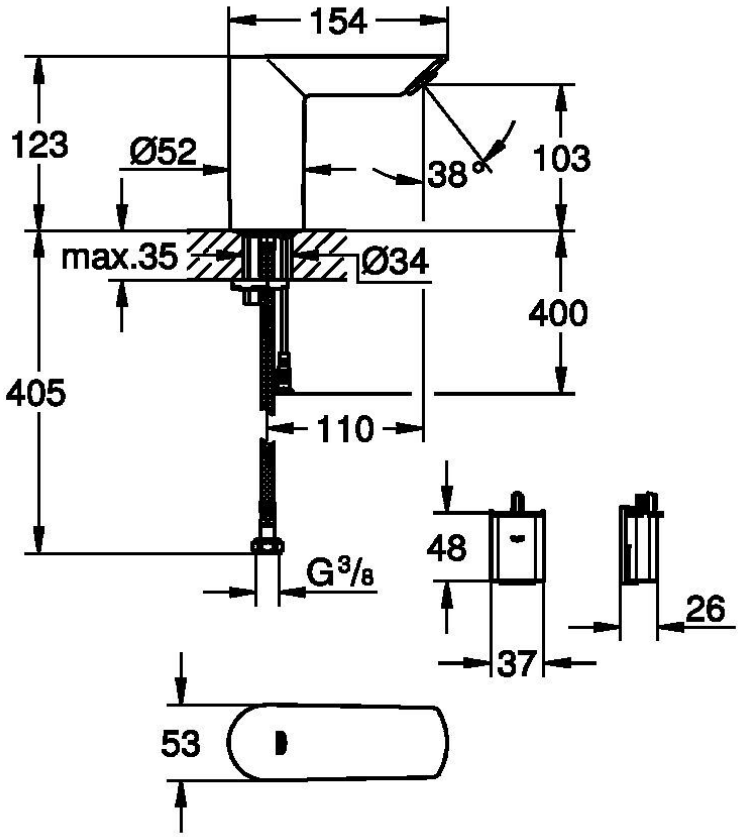

The more stars the more water efficient
WATER RATING
www.waterrating.gov.au
4.5 litres per minute
In accordance with AS/NZS 6400
License No. 0050
LIXIL International Pte. Ltd.

WaterMark
AS/NZS 3718
WMKA00022

BAU COSMOPOLITAN E
HOB MOUNTED SENSOR TAP
MODEL #36471000

Pure Freude an Wasser

GROHE

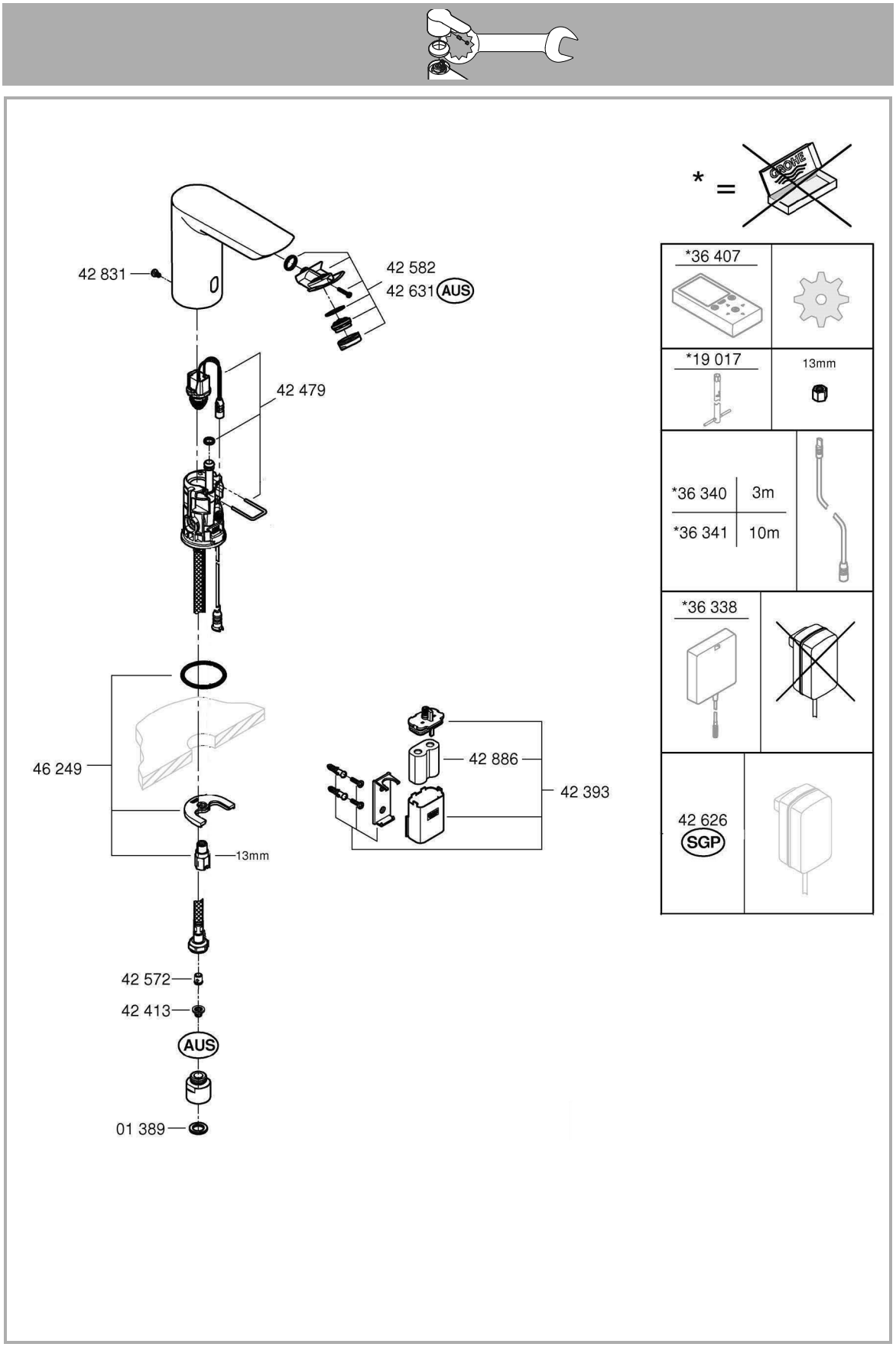

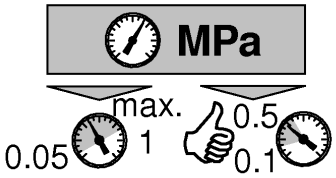
MPa
max.
1
0.05
0.5
0.1

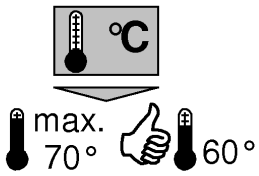
°C
max.
70°
60°

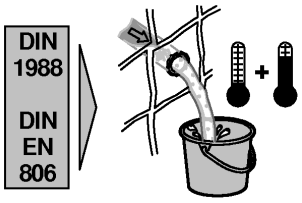
DIN
1988
DIN
EN
806

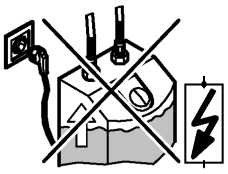

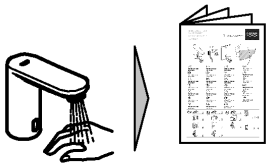

99.0438.XXX

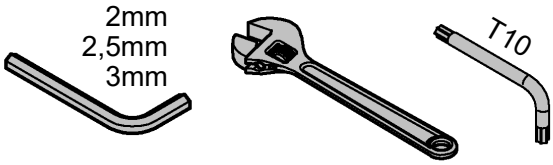
2mm
2,5mm
3mm
T10

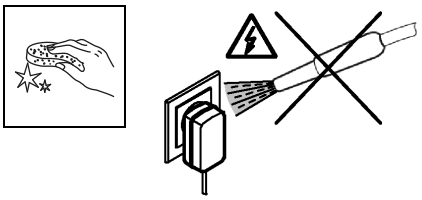

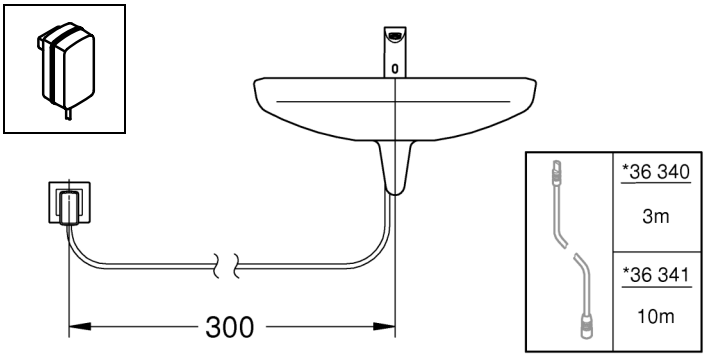
300
*36 340
3m
*36 341
10m

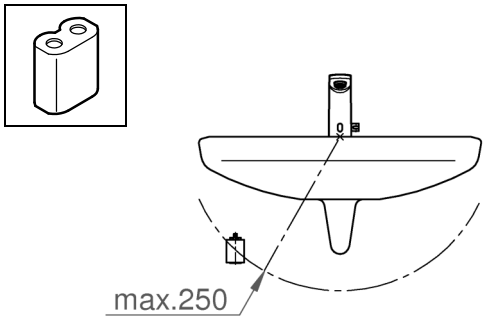
max.250

1

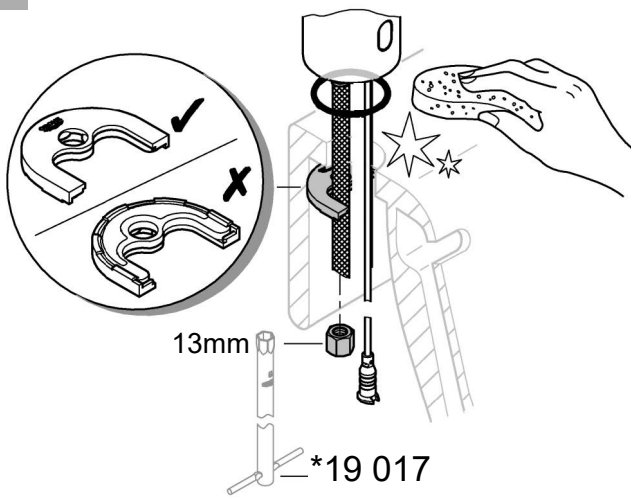
13mm
*19 017

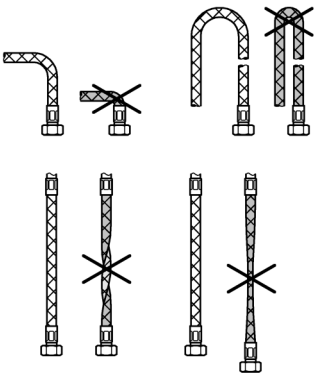

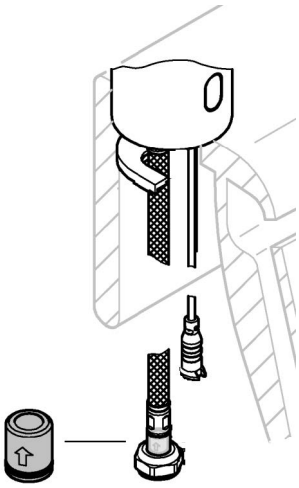

2a

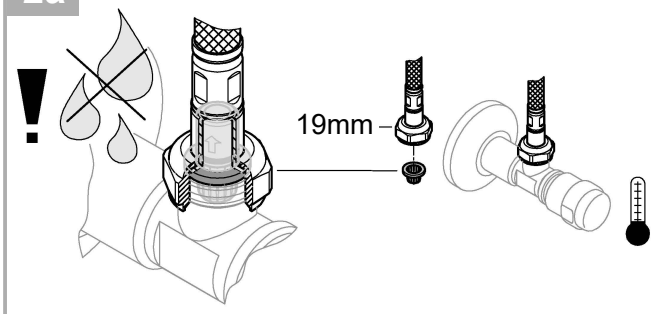

2b

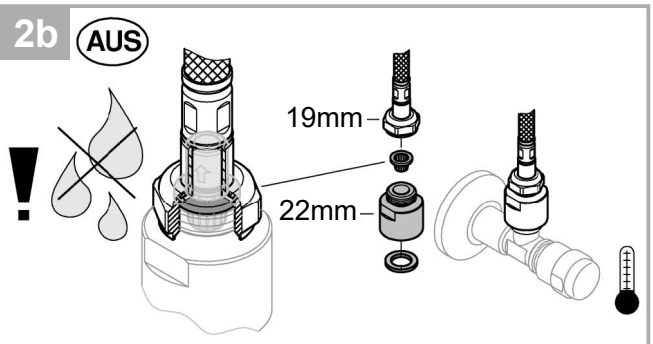

3a

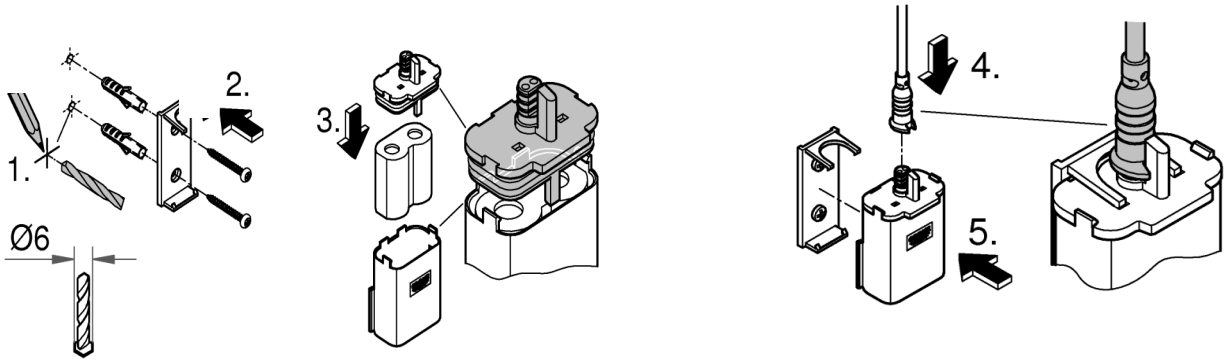

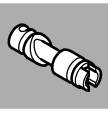

1

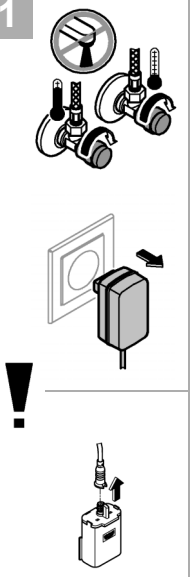

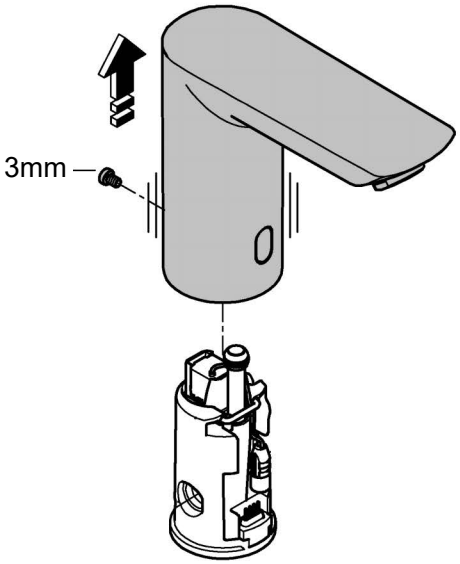

2

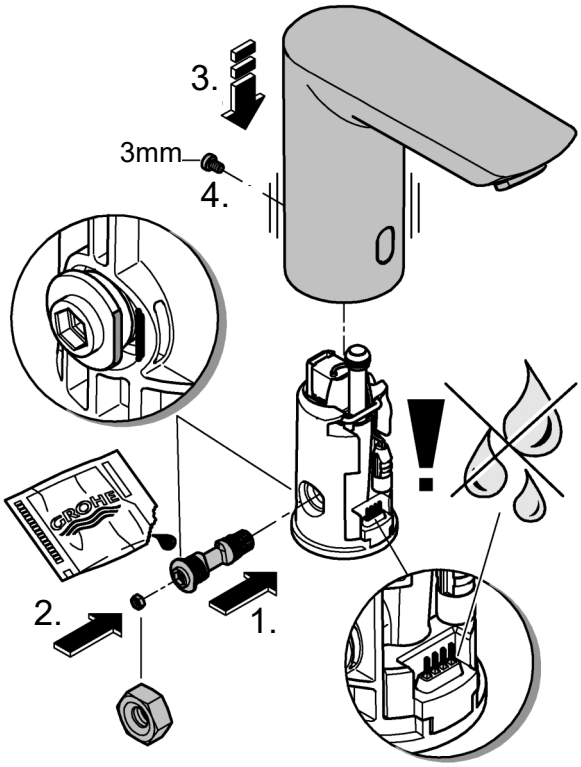

3

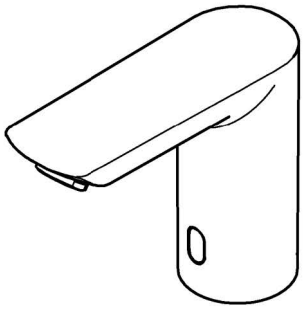

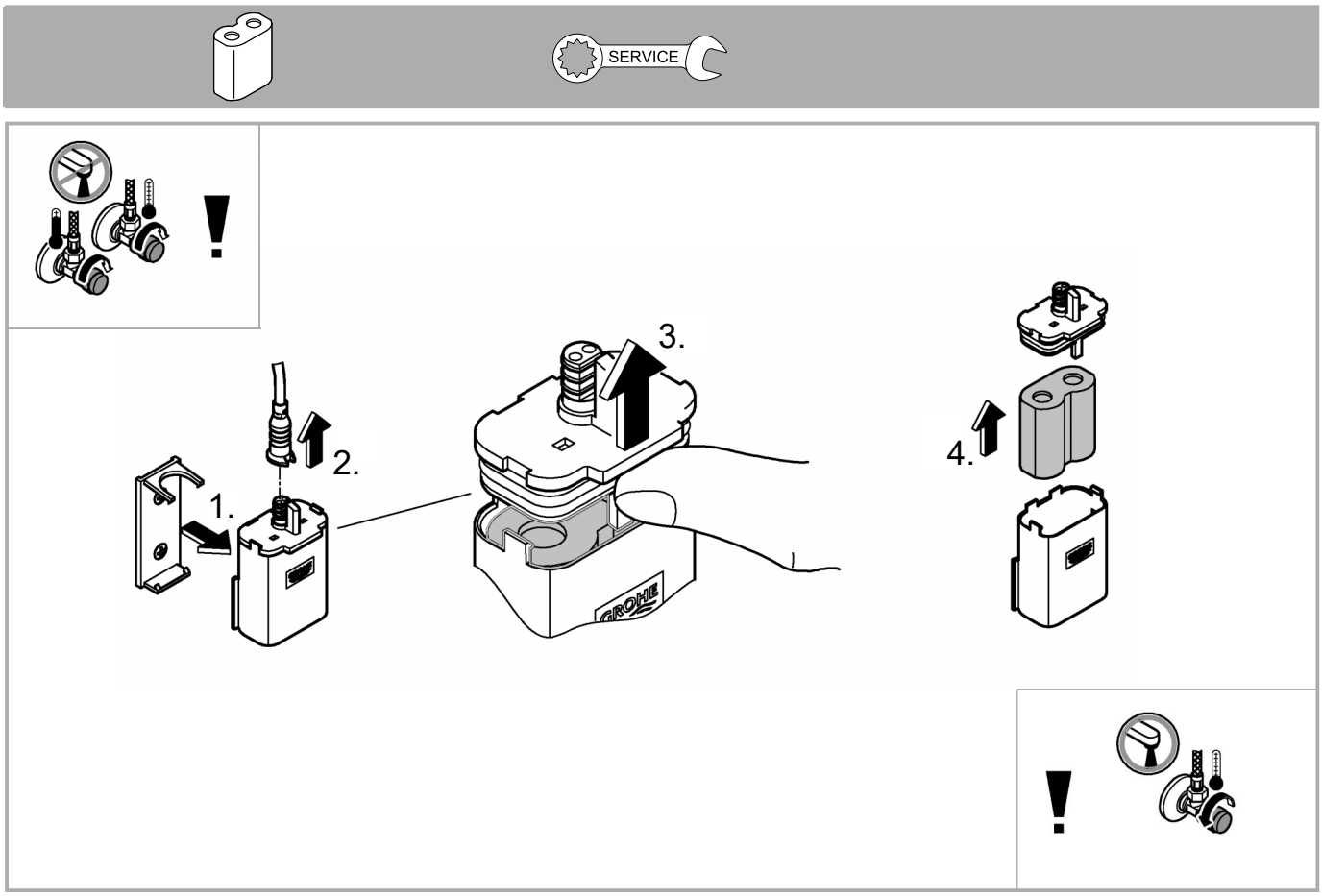
SERVICE
1.
2.
3.
4.

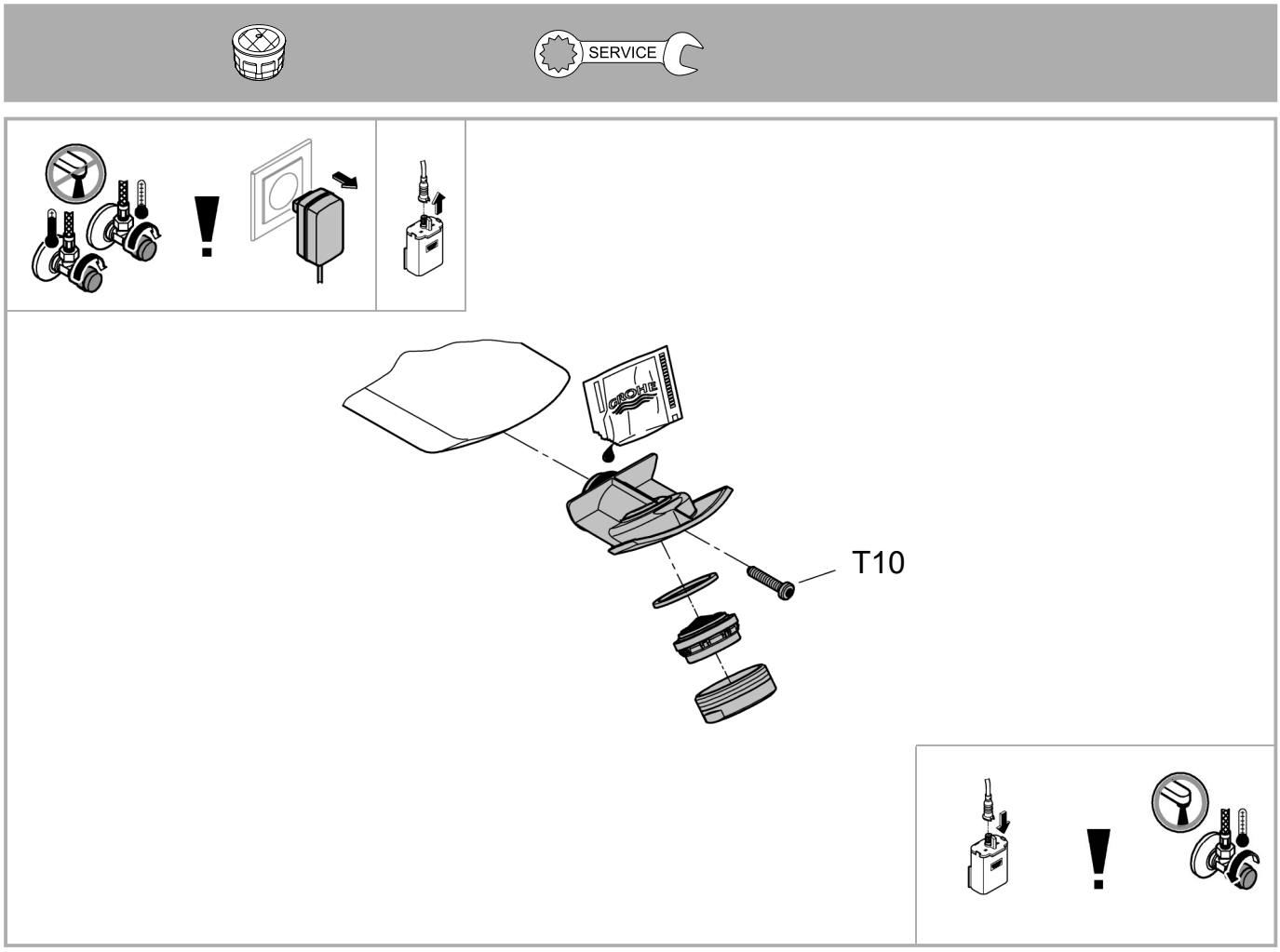
SERVICE
T10

AUS

Safety notes

Prevent danger resulting from damaged voltage supply cables.
If damaged, the voltage supply cable must be replaced by the manufacturer or his customer service department or an equally qualified person.

- Installation is only possible in frost-free rooms.
- The plug-in voltage supply is only suitable for indoor use.
- The plug-in connectors must **not** be directly or indirectly sprayed with water when cleaning.
- The voltage supply must be separately switchable.
- Use **only genuine replacement parts and accessories**. The use of other parts will result in voiding of the warranty and the CE identification, and could lead to injuries.

Technical data

- Automatic safety shut-off: (6 - 420 s adjustable) — 60 s
- Run-on time (0 - 19 s adjustable): — 1 s
- Reception range according to Kodak Gray Card, grey side, 8x10", landscape (7 - 20 cm adjustable): — 12 cm
- Type of fitting protection: — IP 59K

Thermal disinfection possible.

Fitting with switched-mode power supply:

- Voltage supply: — 100-240 V AC 50-60 Hz/6.75 V DC
- Power consumption: — 2.4 W

Fitting with battery:

- Voltage supply: — 6V lithium battery type CR-P2

Electrical test data

- Software class — A
- Contamination class — 2
- Rated surge voltage — 2500 V
- Temperature of ball impact test — 100 °C

The test for electromagnetic compatibility (interference emission test) was performed at the rated voltage and rated current.

If static pressures exceed 0.5 MPa, a pressure-reducing valve must be installed.

Avoid major pressure differences between hot and cold water supply!

Operation and settings,

see technical product information 99.0438.xxx

Activating setting mode

Disconnect the power supply to the electronics and reconnect after 10 s.

The indicator lamp in the sensor system illuminates in setting mode when the detection zone of the fitting is reached by an approaching user.

Setting mode is automatically terminated after 3 minutes.

Maintenance

Batteries which are almost discharged are displayed by a flashing indicator lamp in the sensor system.

Replacement parts

(* = special accessories)

Care

For directions on the care of this fitting, please refer to the accompanying Care Instructions.

This product must be installed in conformance with local codes e.g. AS/NZS 3500 series of standard!

Fault / Cause / Remedy

Fault	Cause	Remedy
Water not flowing	• Filter upstream of solenoid valve blocked • Solenoid valve defective • Plug-in connector without contact • No voltage - Battery discharged (indicator lamp lights up continuously) - Power supply unit defective	- Clean filter - Replace solenoid valve - Check plug-in connector electronics and solenoid valve - Replace battery - Replace power supply unit
Undesired water flow	• Sensor system detection zone set too high for local conditions • Automatic flushing activated • Solenoid valve defective	- Reduce range using remote control (special accessory, prod. no.: 36 407) / app - Wait 1 - 10 minutes - Replace solenoid valve
Flow rate too low	• Mousseur dirty • Filter upstream of solenoid valve dirty • Filters in connection hose dirty • Non-return valve defective	- Clean or replace mousseur - Clean filter - Clean or replace filters - Replace the non-return valve

DESIGN +
ENGINEERING
GROHE GERMANY
97.170.231/ÄM 232009/07.14

Pure Freude an Wasser

GROHE

48166000

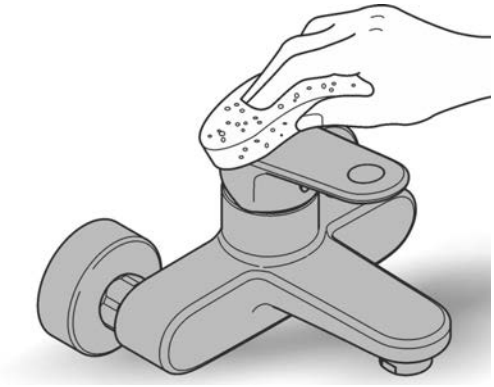

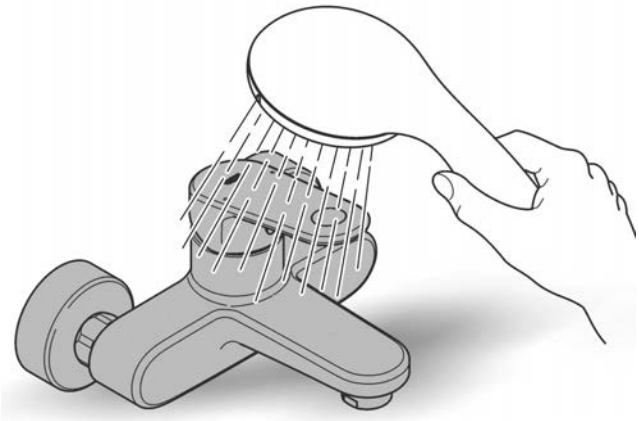

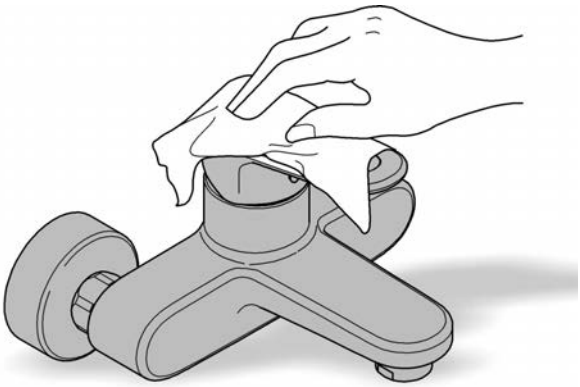

SpeedClean

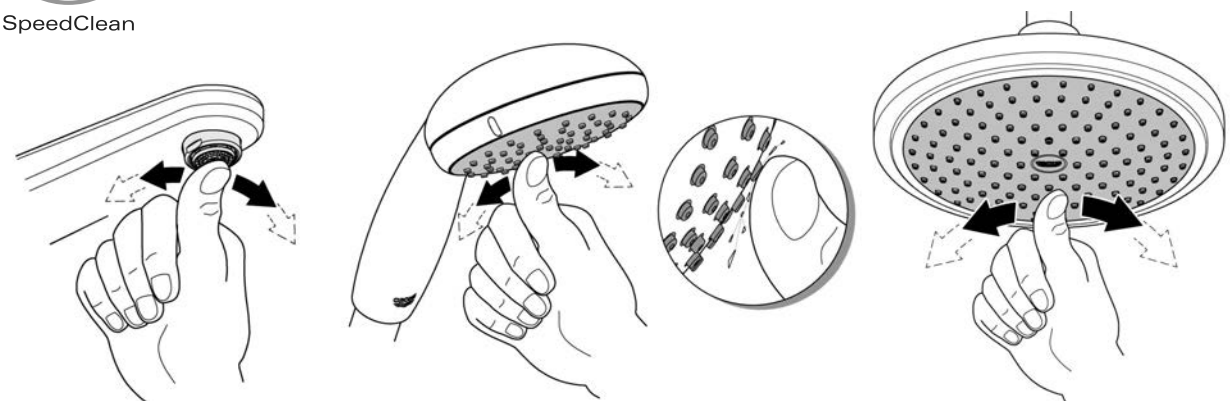

Pure Freude an Wasser

GROHE

D
✆ +49 571 3989 333
impressum@grohe.de

A
✆ +43 1 68060
info-at@grohe.com

AUS
✆ +1300 054 945
grohe_australia@lixil.com

B
✆ +32 16 230660
info.be@grohe.com

BG
✆ +359 2 9719959
grohe-bulgaria@grohe.com

CAU
✆ +99 412 497 09 74
info-az@grohe.com

CDN
✆ +1 888 6447643
info@grohe.ca

CH
✆ +41 448777300
info@grohe.ch

CN
✆ +86 21 63758878

CY
✆ +357 22 465200
info@grome.com

CZ
✆ +420 277 004 190
grohe-cz@grohe.com

DK
✆ +45 44 656800
grohe@grohe.dk

E
✆ +34 93 3368850
grohe@grohe.es

EST
✆ +372 6616354
grohe@grohe.ee

F
✆ +33 1 49972900
marketing-fr@grohe.com

FIN
✆ +358 10 8201100
teknocalor@teknocalor.fi

GB
✆ +44 871 200 3414
info-uk@grohe.com

GR
✆ +30 210 2712908
nsapountzis@ath.forthnet.gr

H
✆ +36 1 2388045
info-hu@grohe.com

HK
✆ +852 2969 7067
info@grohe.hk

I
✆ +39 2 959401
info-it@grohe.com

IND
✆ +91 124 4933000
customercare.in@grohe.com

IS
✆ +354 515 4000
jonst@byko.is

J
✆ +81 3 32989730
info@grohe.co.jp

KZ
✆ +7 727 311 07 39
info-cac@grohe.com

LT
✆ +372 6616354
grohe@grohe.ee

LV
✆ +372 6616354
grohe@grohe.ee

MAL
✆ +1 800 80 6570
info-singapore@grohe.com

N
✆ +47 22 072070
grohe@grohe.no

NL
✆ +31 79 3680133
vragen-nl@grohe.com

NZ
✆ +09 415 6000
sales@monacocorp.co.nz

P
✆ +351 234 529620
commercial-pt@grohe.com

PL
✆ +48 22 5432640
biuro@grohe.com.pl

RI
✆ +62 21 2358 4751
info-singapore@grohe.com

RO
✆ +40 21 2125050
info-ro@grohe.com

ROK
✆ +82 2 559 0790
info-singapore@grohe.com

RP
✆ +63 2 8041617

RUS
✆ +7 495 9819510
info@grohe.ru

S
✆ +46 771 141314
grohe@grohe.se

SGP
✆ +65 6 7385585
info-singapore@grohe.com

SK
✆ +420 277 004 190
grohe-cz@grohe.com

T
✆ +66 2610 3685
info-singapore@grohe.com

TR
✆ +90 216 441 23 70
GroheTurkey@grome.com

UA
✆ +38 44 5375273
info-ua@grohe.com

USA
✆ +1 800 4447643
us-customerservice@grohe.com

VN
✆ +84 8 5413 6840
info-singapore@grohe.com

AL BiH HR KS ME MK SLO SRB
✆ +385 1 2911470
adria-hr@grohe.com

Eastern Mediterranean, Middle East - Africa Area Sales Office:
✆ +357 22 465200
info@grome.com

IR OM UAE YEM
✆ +971 4 3318070
grohedubai@grome.com

Far East Area Sales Office:
✆ +65 6311 3600
info@grohe.com.sg