Specification Sheet

KADO

Kado Lussi Wall Hung Vortex Rimless Toilet Suite with Soft Close Quick Release Seat Matte White (4 Star)

1832708

SPECIFICATIONS	
Recommended Use	Residential;Commercial
Colour Finish	Matte White
Rim Configuration	Rimless
Pan Outlet Type	P Trap
Pan Material	Vitreous China
Toilet Seat Type	Soft Close;Quick Release
Toilet Seat Material	Urea
WARRANTY	
Residential & Commercial Use (Years)	25
Spare Parts & Labour (Years)	1
Please refer to Kado Warranty page for full Terms and Conditions	



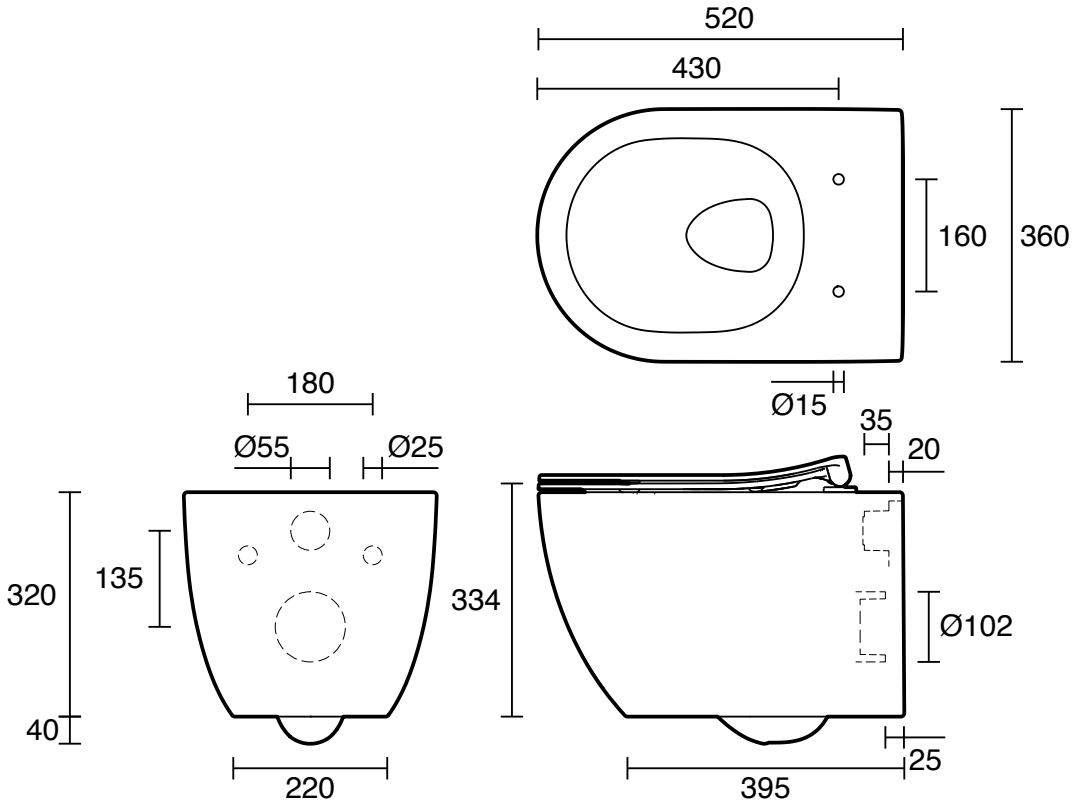

Dimensions are nominal measurements only.

CLEANING RECOMMENDATIONS:

We recommend the use of soapy water or approved cleaners. This product should not be cleaned with abrasive materials. Damage caused by any improper treatment is not covered by the product warranty. Refer to Warranty Conditions

The more stars the more water efficient
WATER RATING
www.waterrating.gov.au
3.4 litres average flush
4.6 L per full flush / 3.1 L per half flush
In accordance with AS/NZS 6400
Licence No. 0025
Reece Limited

WaterMark
AS 1172
WMKA21192

Disclaimer: Products in this specification manual must by regulation be installed by licensed and registered trade people. The manufacturer/distributor reserves the right to vary specifications or delete models from their range without prior notification. Dimensions are nominal measurements only. Dimensions and set-outs listed are correct at time of publication however the manufacturer/distributor takes no responsibility for printing errors.

Published 01/10/2026

To see the complete Kado range go to www.reece.com.au

reece