Specification Sheet

HYDROTHERM
TOWEL RAILS

Hydrotherm Pure Swivel Heated Towel Rail 400 x 635mm Matte Black

133909

SPECIFICATIONS	
Recommended Use	Residential;Commercial
Colour Finish	Matte Black
Primary Material	Copper
Mounting	Wall
Electrical Connection Type	Hardwired
Electrical Connection Position	Bottom
Heating Method	Water Filled
Power Supply (V)	230V AC
IP Rating	IPX5
WARRANTY	
Residential & Commercial Use (Years)	10
Spare Parts & Labour (Years)	1
Please refer to Hydrotherm Warranty page for full Terms and Conditions	

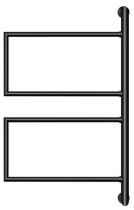

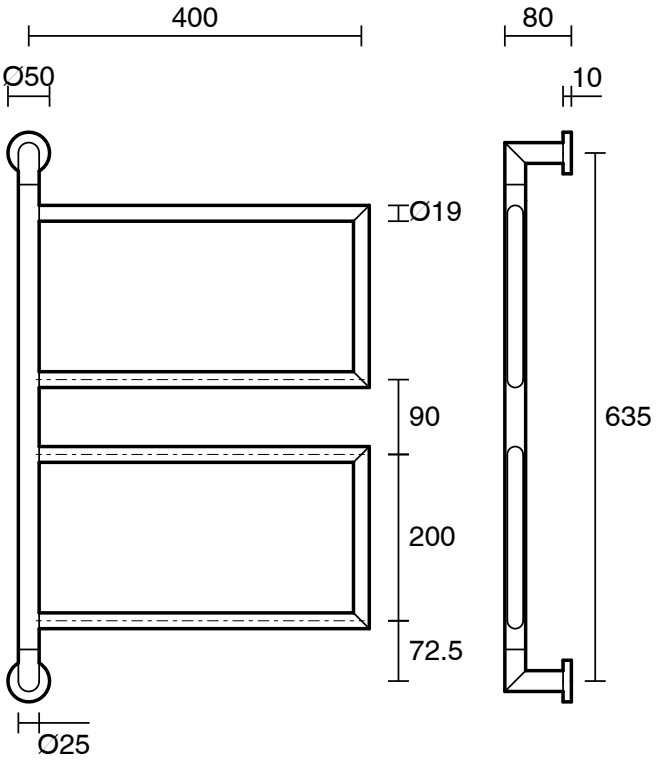

Dimensions are nominal measurements only.

CLEANING RECOMMENDATIONS:
We recommend the use of soapy water or approved cleaners. This product should not be cleaned with abrasive materials. Damage caused by any improper treatment is not covered by the product warranty. Refer to Warranty Conditions

Disclaimer: Products in this specification manual must by regulation be installed by licensed and registered trade people. The manufacturer/distributor reserves the right to vary specifications or delete models from their range without prior notification. Dimensions are nominal measurements only. Dimensions and set-outs listed are correct at time of publication however the manufacturer/distributor takes no responsibility for printing errors.

Published 18/05/2026

To see the complete Hydrotherm range go to www.reece.com.au