Specification Sheet

SUSSEX

Sussex Pure Progressive Column Shower Mixer Tap System 250mm with Handshower Right Hand Chrome (3 Star)

2299606

SPECIFICATIONS	
Recommended Use	Residential;Commercial
Colour Finish	Polished Chrome
Primary Material	DR Brass
Recommended Pressure Range	150 - 500 kPa as per AS3500
Max Continuous Working Temperature (deg C)	65
Min Continuous Working Temperature (deg C)	1
WARRANTY	
Residential Use (Years)	40
Commercial Use (Years)	10
Please refer to Sussex Warranty page for full Terms and Conditions	

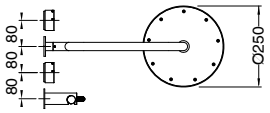

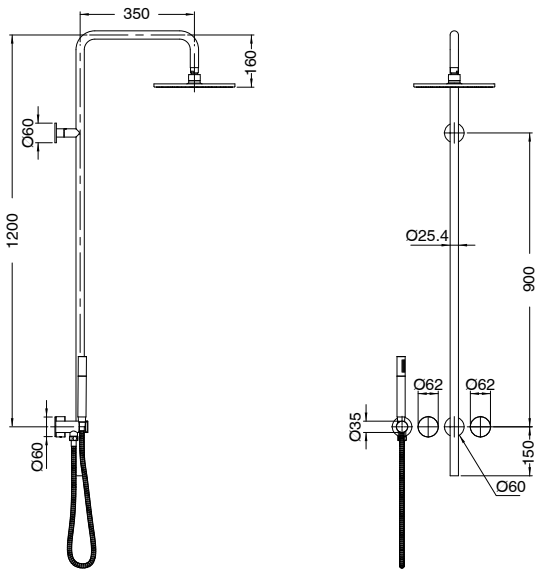

Dimensions are nominal measurements only.

CLEANING RECOMMENDATIONS:
We recommend the use of soapy water or approved cleaners. This product should not be cleaned with abrasive materials. Damage caused by any improper treatment is not covered by the product warranty. Refer to Warranty Conditions

WATER RATING
www.waterrating.gov.au
8.5 litres per minute
In accordance with AS/NZS 6400
Licence No. 0124
Sussex Taps Pty Ltd

WaterMark
AS/NZS 3718
WMKA20081

Disclaimer: Products in this specification manual must by regulation be installed by licensed and registered trade people. The manufacturer/distributor reserves the right to vary specifications or delete models from their range without prior notification. Dimensions are nominal measurements only. Dimensions and set-outs listed are correct at time of publication however the manufacturer/distributor takes no responsibility for printing errors.

Published 10/04/2026

To see the complete Sussex range go to
www.reece.com.au

reece