Specification Sheet

LAUFEN

# LAUFEN Meda Wall Basin Right Hand Bowl No Overflow No Taphole 460mm x 235mm White with Fixing Bolts

**54999**

| SPECIFICATIONS | |
|---|---|
| Recommended Use | Residential;Commercial |
| Primary Material | Vitreous China |
| Colour Finish | White |
| Bowl Capacity (L) | 2.5 |
| Weight (kg) | 5.5 |
| Taphole Configuration | None |
| Overflow Included | No |
| Plug & Waste Included | No |
| **WARRANTY** | |
| Residential & Commercial Use (Years) | 25 |
| Spare Parts & Labour (Years) | 1 |
| *Please refer to LAUFEN Warranty page for full Terms and Conditions* | |



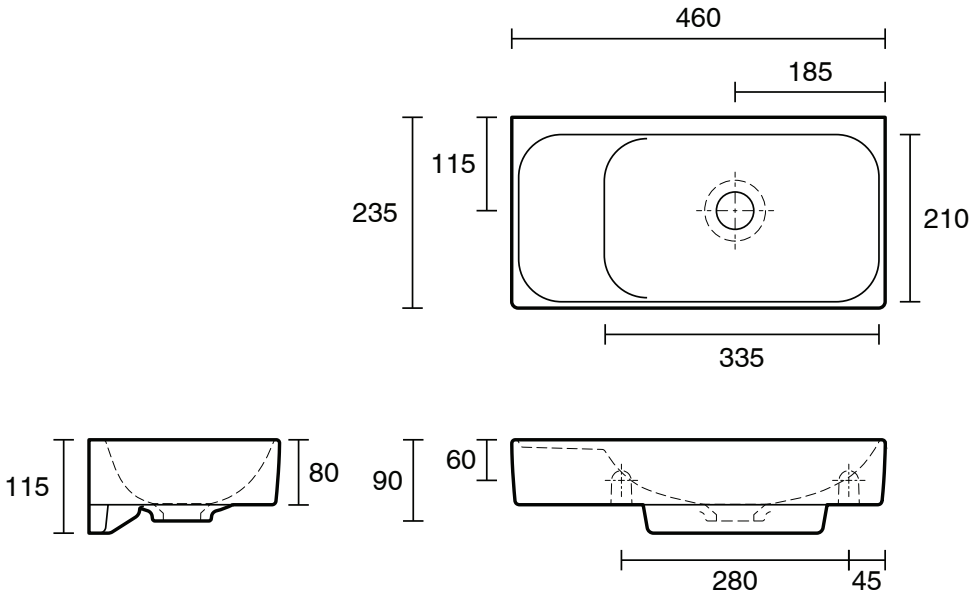


Dimensions are nominal measurements only.

**CLEANING RECOMMENDATIONS:**

We recommend the use of soapy water or approved cleaners. This product should not be cleaned with abrasive materials. Damage caused by any improper treatment is not covered by the product warranty. Refer to Warranty Conditions

**Disclaimer:** Products in this specification manual must by regulation be installed by licensed and registered trade people. The manufacturer/distributor reserves the right to vary specifications or delete models from their range without prior notification. Dimensions are nominal measurements only. Dimensions and set-outs listed are correct at time of publication however the manufacturer/distributor takes no responsibility for printing errors.

**Published 02/10/2026**

To see the complete LAUFEN range go to www.reece.com.au

reece