# ACS1200G Specifications

| | |
|---|---|
| **Frame** | 20 mm x 20 mm x 1.6 mm Welded Steel Tube |
| **Mesh** | 25 mm x 25 mm x 3 mm Welded Mesh - Welded to Frame |
| **Cage Depth** | 350 mm deep OD - 330 mm deep ID |
| **Cage Width** | 795 mm wide OD - 755 mm wide ID |
| **Cage Height** | 1240 mm high OD, 1200 mm ID |
| **Mounting Brackets** | 80 mm x 50 mm Mounting Brackets. Optional holes allow the cage to be mounted flush to the ground/to a wall, or with 25 mm or 50 mm clearance for pipes and conduits |
| **Cage Safety** | Front Corners are 90 mm radius to minimise personal injury |
| **Assembly Required** | Units are made up of the following parts (see diagram)<br>**A** End Panels (2)<br>**B** Side Panels (2)<br>**C** Corner Panels (2)<br>**D** Mounting Brackets (6) |
| **Service Access** | All panels (except sidepanels) are easily removable for full service access |
| **Assembly Fixings** | All Fixings supplied - M6 tamper proof Torx bolts, washers and tool |
| **Coating** | Two stage protection with Hot Dip Galvanised and Black Powder Coating |

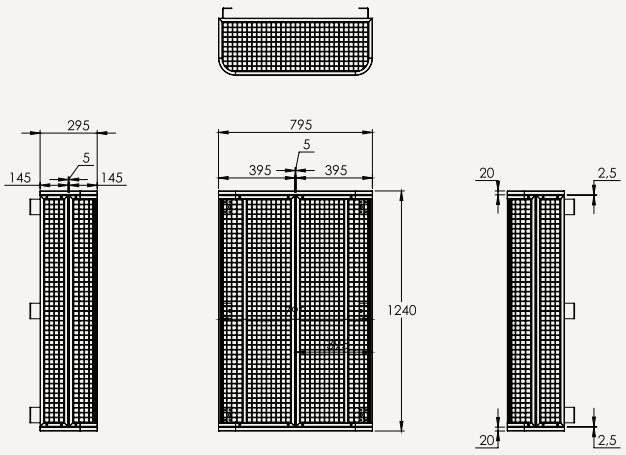


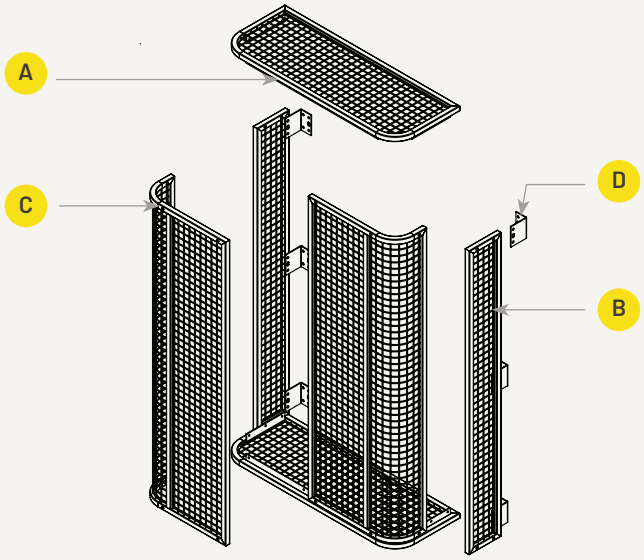


**P** (03) 9989 5850
**E** sales@avantageaustralia.com.au
**W** avantageaustralia.com.au

**A** 74 Scanlon Drive
Epping, Victoria, 3076
Australia

AVANTAGE
AUSTRALIA