Specification Sheet

mizu

Mizu Drift Basin Mixer Straight Spout with Extended Lever Tap Brushed Bronze (6 Star) Lead Free

2298928

SPECIFICATIONS	
Recommended Use	Residential;Commercial
Colour Finish	Brushed Bronze
Primary Material	Lead Free Brass
Recommended Pressure Range	150 - 500 kPa as per AS3500
Max Continuous Working Temperature (deg C)	65
Min Continuous Working Temperature (deg C)	5
WARRANTY	
Residential & Commercial Use (Years)	25
Spare Parts & Labour (Years)	1
Please refer to Mizu Warranty page for full Terms and Conditions	

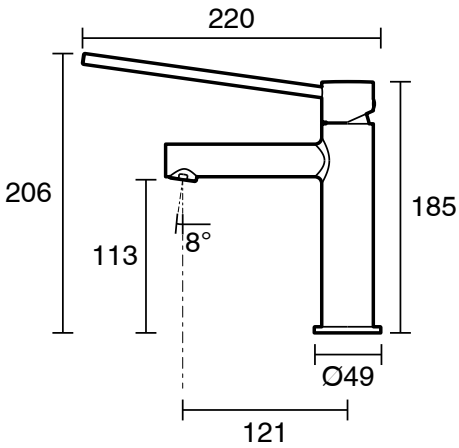

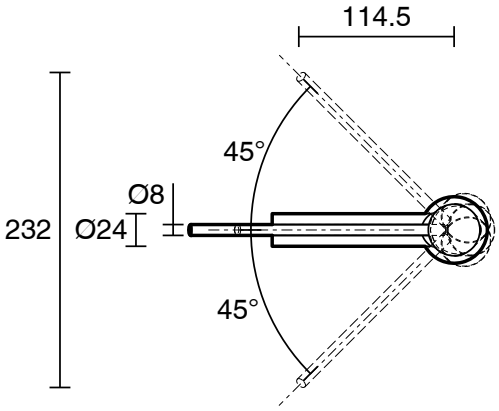

Dimensions are nominal measurements only.

CLEANING RECOMMENDATIONS:
We recommend the use of soapy water or approved cleaners. This product should not be cleaned with abrasive materials. Damage caused by any improper treatment is not covered by the product warranty. Refer to Warranty Conditions

WaterMark
AS/NZS 3718
WM-022094

Disclaimer: Products in this specification manual must by regulation be installed by licensed and registered trade people. The manufacturer/distributor reserves the right to vary specifications or delete models from their range without prior notification. Dimensions are nominal measurements only. Dimensions and set-outs listed are correct at time of publication however the manufacturer/distributor takes no responsibility for printing errors.

Published 11/09/2026

To see the complete Mizu range go to
www.reece.com.au

reece