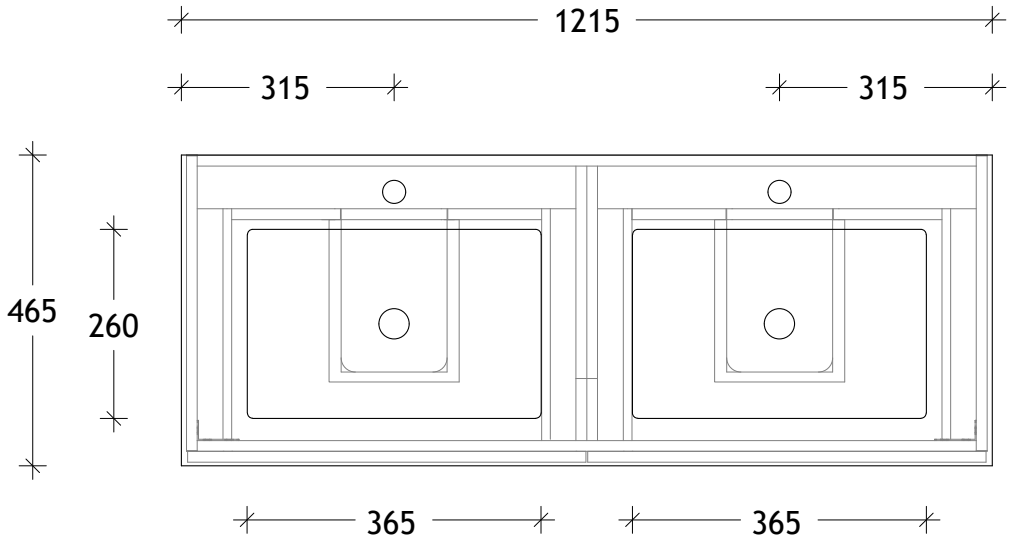
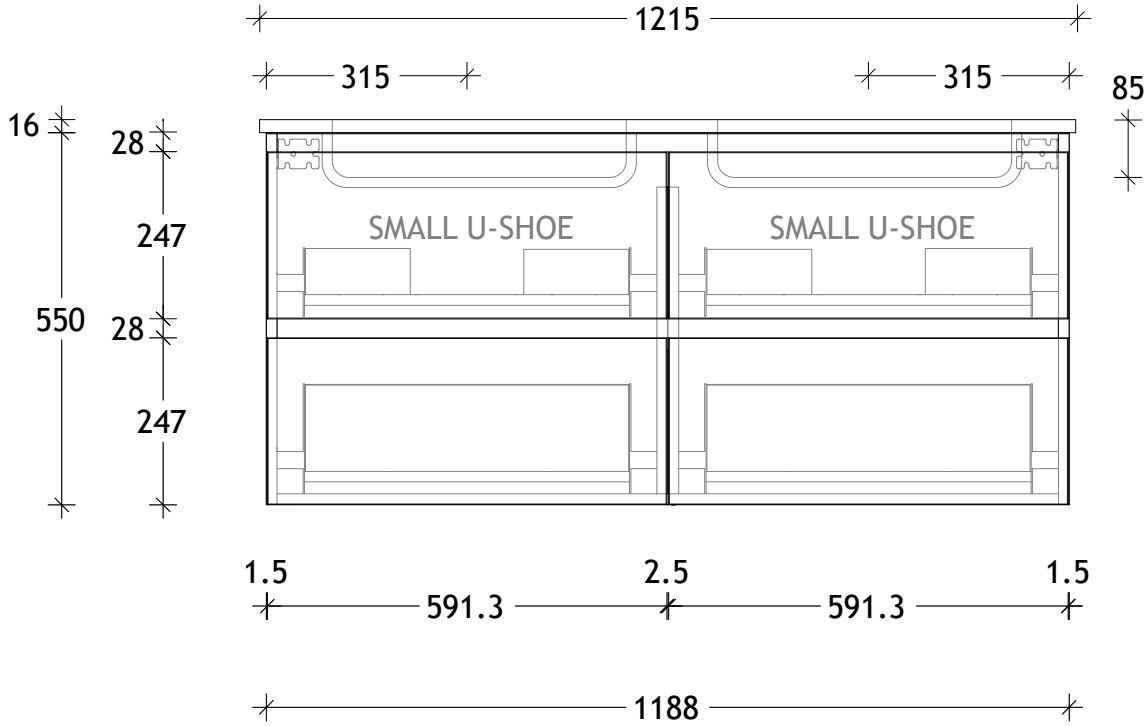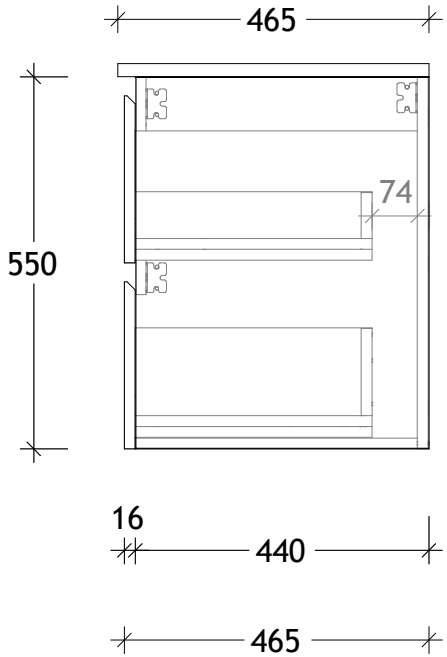
CERAMIC TOP
BASIN CAPACITY: 4L TO OVERFLOW