ESSENTIALS ACCESSORIES

SPARE TOILET ROLL HOLDER

MODEL #40385001

Pure Freude an Wasser

GROHE

Product Specifications

Product Description:

Essentials
Spare toilet paper holder material:
metal
wall mounted
concealed fastening
GROHE StarLight® chrome finish

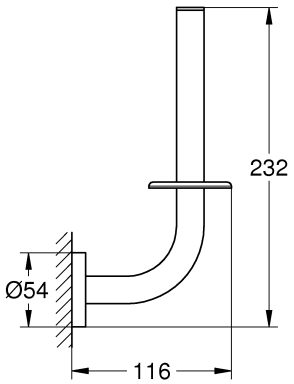

ESSENTIALS ACCESSORIES

SPARE TOILET ROLL HOLDER

MODEL #40385001

Pure Freude an Wasser

GROHE

Installation instructions

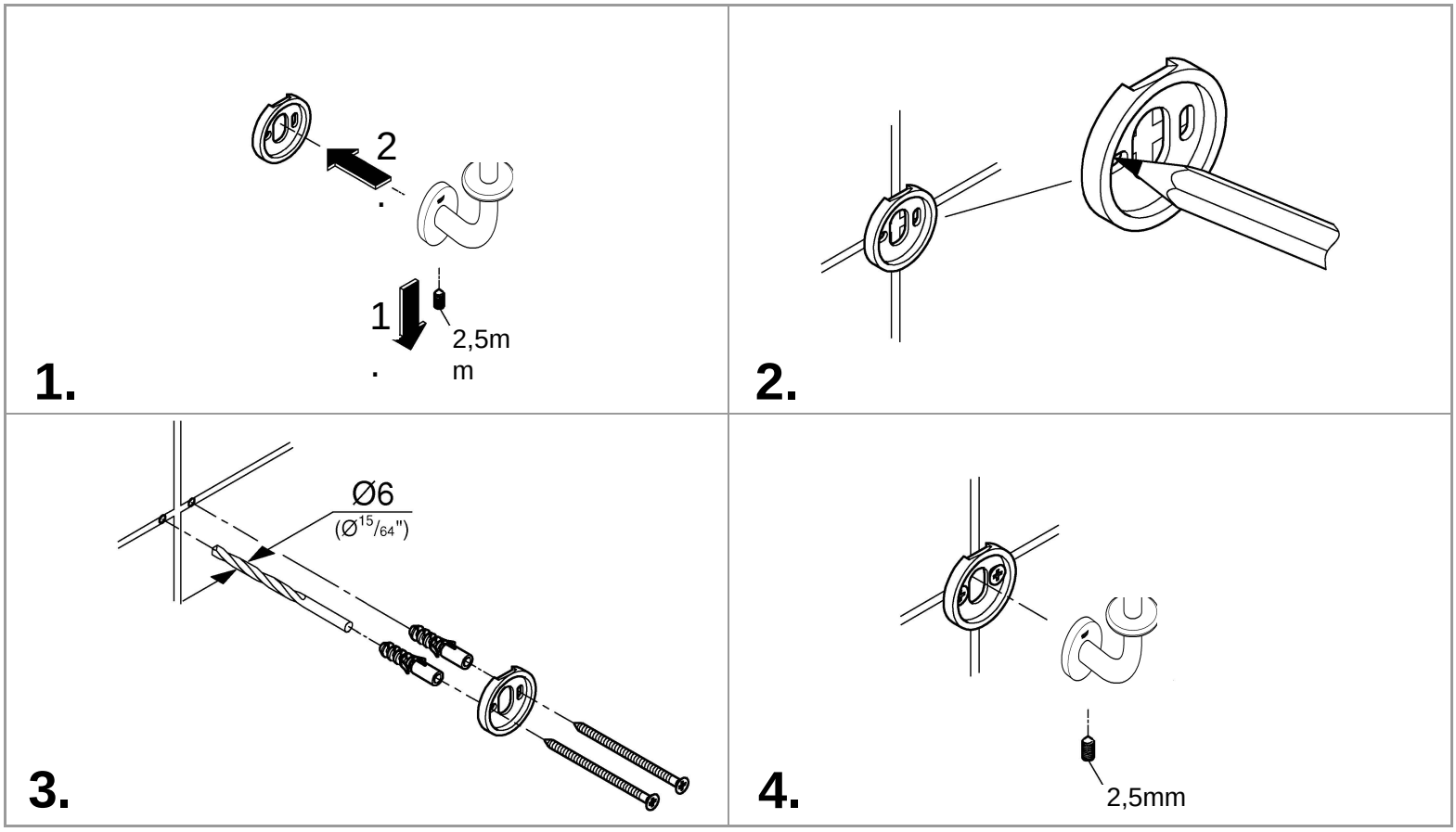

Installation Instructions

When installing bathroom accessories please ensure all fixings are installed for maximum stability.

Care

For directions on the care of this fitting, please refer to the accompanying care instructions.

DESIGN +
ENGINEERING
GROHE GERMANY
97.170.231/ÄM 232009/07.14

Pure Freude an Wasser

GROHE

48166000

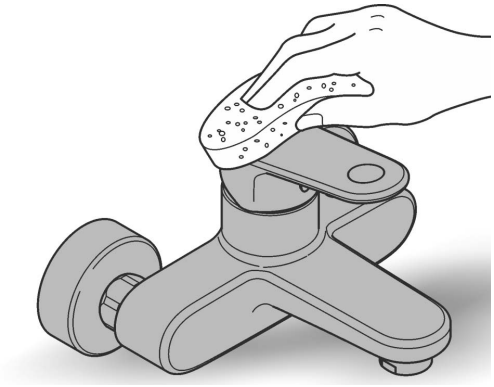

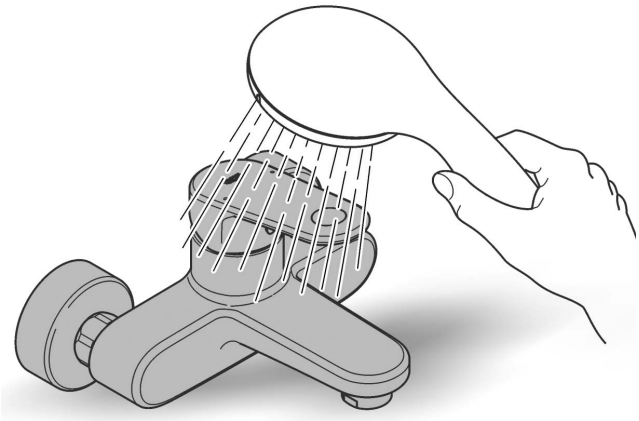

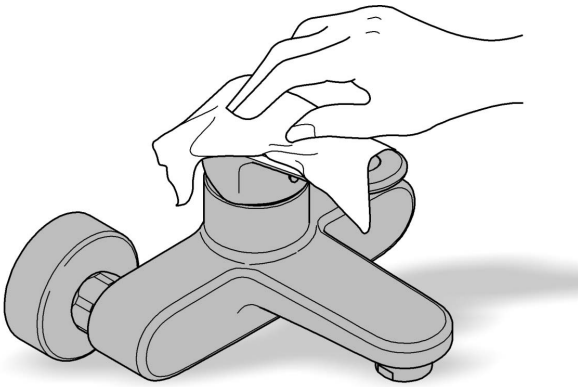

SpeedClean

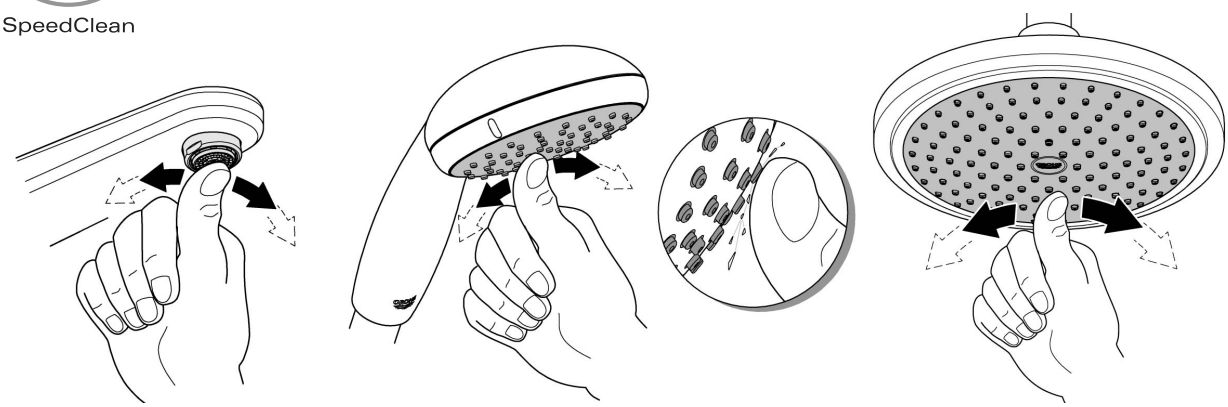

Pure Freude an Wasser

GROHE

D
✆ +49 571 3989 333
impressum@grohe.de

A
✆ +43 1 68060
info-at@grohe.com

AUS
✆ +1300 054 945
grohe_australia@lixil.com

B
✆ +32 16 230660
info.be@grohe.com

BG
✆ +359 2 9719959
grohe-bulgaria@grohe.com

CAU
✆ +99 412 497 09 74
info-az@grohe.com

CDN
✆ +1 888 6447643
info@grohe.ca

CH
✆ +41 448777300
info@grohe.ch

CN
✆ +86 21 63758878

CY
✆ +357 22 465200
info@grome.com

CZ
✆ +420 277 004 190
grohe-cz@grohe.com

DK
✆ +45 44 656800
grohe@grohe.dk

E
✆ +34 93 3368850
grohe@grohe.es

EST
✆ +372 6616354
grohe@grohe.ee

F
✆ +33 1 49972900
marketing-fr@grohe.com

FIN
✆ +358 10 8201100
teknocalor@teknocalor.fi

GB
✆ +44 871 200 3414
info-uk@grohe.com

GR
✆ +30 210 2712908
nsapountzis@ath.forthnet.gr

H
✆ +36 1 2388045
info-hu@grohe.com

HK
✆ +852 2969 7067
info@grohe.hk

I
✆ +39 2 959401
info-it@grohe.com

IND
✆ +91 124 4933000
customercare.in@grohe.com

IS
✆ +354 515 4000
jonst@byko.is

J
✆ +81 3 32989730
info@grohe.co.jp

KZ
✆ +7 727 311 07 39
info-cac@grohe.com

LT
✆ +372 6616354
grohe@grohe.ee

LV
✆ +372 6616354
grohe@grohe.ee

MAL
✆ +1 800 80 6570
info-singapore@grohe.com

N
✆ +47 22 072070
grohe@grohe.no

NL
✆ +31 79 3680133
vragen-nl@grohe.com

NZ
✆ +09 573 0490
sales@robertson.co.nz

P
✆ +351 234 529620
commercial-pt@grohe.com

PL
✆ +48 22 5432640
biuro@grohe.com.pl

RI
✆ +62 21 2358 4751
info-singapore@grohe.com

RO
✆ +40 21 2125050
info-ro@grohe.com

ROK
✆ +82 2 559 0790
info-singapore@grohe.com

RP
✆ +63 2 8041617

RUS
✆ +7 495 9819510
info@grohe.ru

S
✆ +46 771 141314
grohe@grohe.se

SGP
✆ +65 6 7385585
info-singapore@grohe.com

SK
✆ +420 277 004 190
grohe-cz@grohe.com

T
✆ +66 2610 3685
info-singapore@grohe.com

TR
✆ +90 216 441 23 70
GroheTurkey@grome.com

UA
✆ +38 44 5375273
info-ua@grohe.com

USA
✆ +1 800 4447643
us-customerservice@grohe.com

VN
✆ +84 8 5413 6840
info-singapore@grohe.com

AL BiH HR KS ME MK SLO SRB
✆ +385 1 2911470
adria-hr@grohe.com

Eastern Mediterranean, Middle East - Africa Area Sales Office:
✆ +357 22 465200
info@grome.com

IR OM UAE YEM
✆ +971 4 3318070
grohedubai@grome.com

Far East Area Sales Office:
✆ +65 6311 3600
info@grohe.com.sg