Specification Sheet

Roca The Gap Square Close Coupled Back to Wall Rimless Overheight Bottom Inlet Toilet Suite with Soft Close Quick Release Toilet Seat White (4 Star)

10045

SPECIFICATIONS	
Recommended Use	Residential;Commercial
Rim Configuration	Rimless
Pan Outlet Type	P Trap;S Trap
Pan Material	Vitreous China
Pan Weight (kg)	32
Toilet Seat Type	Soft Close;Quick Release
Toilet Seat Material	Urea
WARRANTY	
Residential & Commercial Use (Years)	25
Spare Parts & Labour (Years)	1
Please refer to Roca Warranty page for full Terms and Conditions	

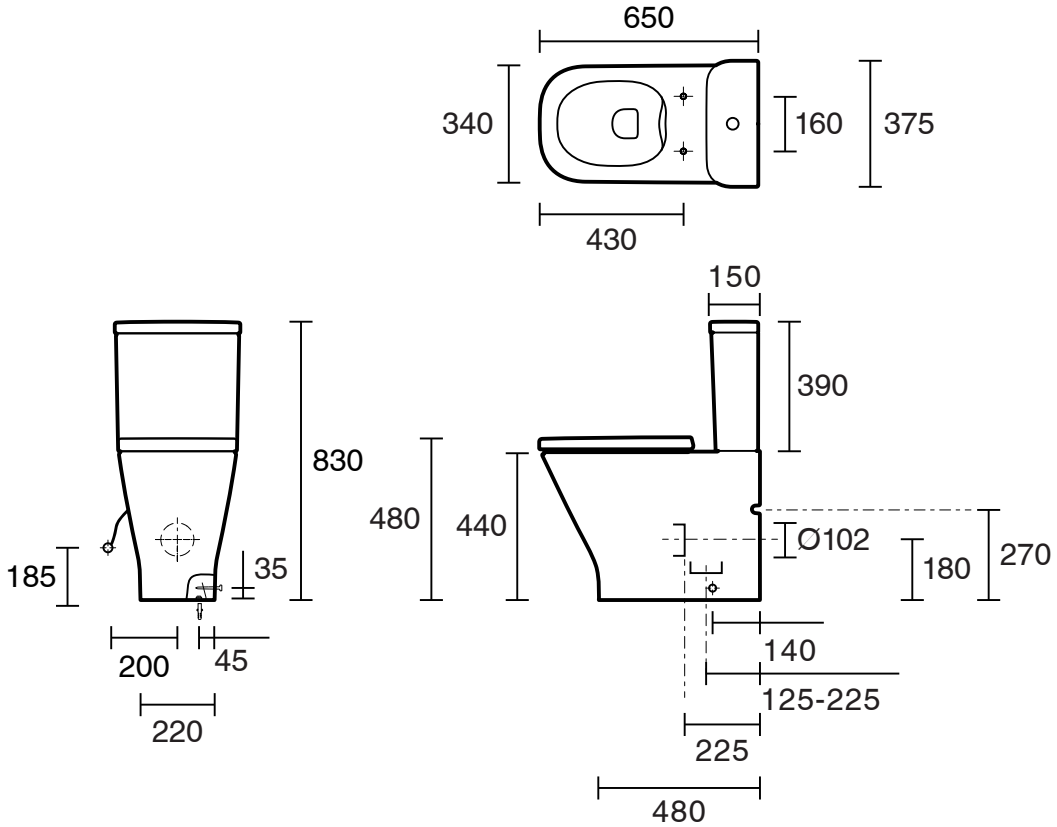

Dimensions are nominal measurements only.

CLEANING RECOMMENDATIONS:
We recommend the use of soapy water or approved cleaners. This product should not be cleaned with abrasive materials. Damage caused by any improper treatment is not covered by the product warranty. Refer to Warranty Conditions

Disclaimer: Products in this specification manual must by regulation be installed by licensed and registered trade people. The manufacturer/distributor reserves the right to vary specifications or delete models from their range without prior notification. Dimensions are nominal measurements only. Dimensions and set-outs listed are correct at time of publication however the manufacturer/distributor takes no responsibility for printing errors.

Published 22/05/2026

To see the complete Roca range go to
www.reece.com.au