Selection: Condensing Units

Input Values

Unit type	LHL5E/4DES-5Y
Series	ECOLITE
Refrigerant	R455A
Reference temperature	Dew point temp.
Evaporating SST	-24,00 °C
Ambient temp.	43,0 °C
Suct. gas superheat	20,00 K
Useful superheat	100%
Operating mode	Auto
Power supply	400V-3-50Hz
Capacity control	100%

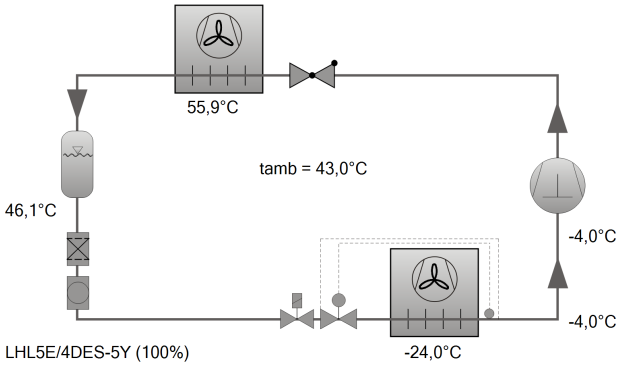

Result

Unit type	LHL5E/4DES-5Y-40S
Capacity steps	100%
Cooling capacity	3,94 kW
Evaporator capacity	3,94 kW
Heating Capacity (HR)	7,66 kW
Power input	3,72 kW
Current (400V)	6,99 A
Voltage range	380-420V
Mass flow	114,2 kg/h
Condensing SDT	55,9 °C
Liquid subcooling	1,00 K
Operating mode	Standard

Tentative Data.
Consider national standards for the use of flammable refrigerants.
Power input including fan power absorbtion
Performance data certified by ASERCOM (see T. Data/ Notes)

Application Limits LHL5E/4DES-5

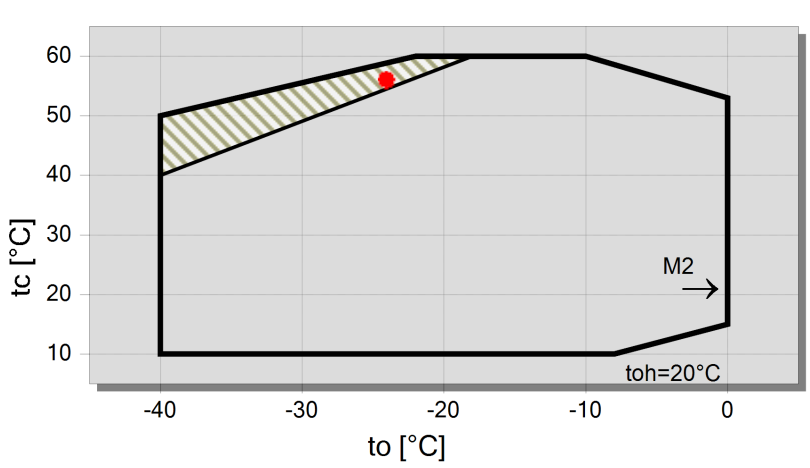

Legend

suction gas superheat ≤20K

M2: motor 2

A

Technical Data: LHL5E/4DES-5Y

Dimensions and Connections

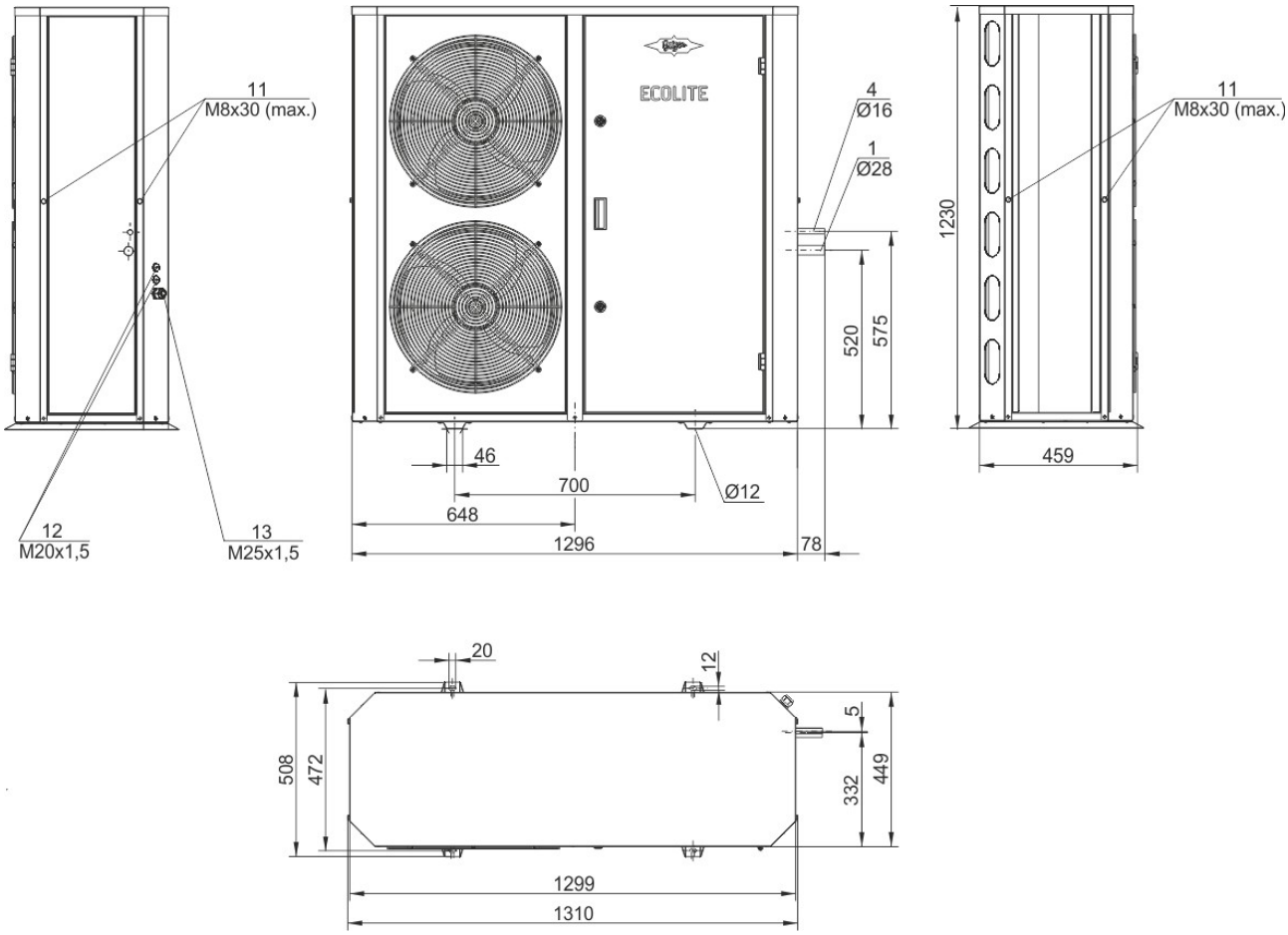

Legend of connection positions according to "Dimensions":

1 Suction gas valve
2 Discharge gas line
3 Condensate line
4 Refrigerant outlet (liquid line)
5 Pressure relief valve connection
6 Liquid injection (operation without liquid subcooler and with thermostatic expansion valve)
7 Refrigerant inlet at liquid subcooler
8 Refrigerant outlet at liquid subcooler
9 Suction gas line
10 Sight glass
11 Load suspension points
12 Plug for screwed cable gland
13 Cable bushing (for cables ø 9-17 mm) (only ECOLITE)
Dimensions can show tolerances according to EN ISO 13920-B.

Technical Data

Technical Data	
Weight	216 kg
Total width	1300 mm
Total depth	450 mm
Total height	1230 mm
Connection suction line	28 mm - 1 1/8"
Connection liquid line	16 mm - 5/8"
Voltage (50Hz, more on request)	230V-1-50Hz (Standard)
Current / Power consumption of each fan (50Hz)	120 W
Air flow condenser 50Hz	6000 m³/h
Coil Volume	3,25 dm³
Extent of delivery (standard)	
*According PED 2014/68/EU	Standard
ECOLITE controller with display	Standard
ECOLINE with VARISTEP (CRII)	100 .. 50 %
Liquid receiver with shut-off valve	Standard
Complete piping and wiring with main switch and compressor contactor	Standard
High and low pressure switch	Standard
High and low pressure transmitter	Standard
Sight glass and filter drier in liquid line	Standard
Oil heater	Standard
Discharge gas temperature sensor	Standard
suction gas temperature sensor	Standard
Ambient temperature sensor	Standard
Discharge gas line	Standard
Weather protective housing	Standard
Fans: elect. Speed regulator	Standard
Sound insulation for compressor housing	Standard
Additional cooling with EC fan	Standard
Connection for pressure relief valve	Standard
Fans: Number	2
Protective charge	Standard
Available options	
Second capacity regulator (CRII)	100-10 %
Condenser with improved corrosion protection, plastic coated fins or copper fins	Option
Oil separator with check valve	Option
Adjustable high and low pressure switch	Option
Connection for heat recovery	Option
Oil level monitoring	OLC-K1
check valve for liquid line (additional pressure relief valve according to EN 378 required)	Option
Cold store temperature sensor	Option
BEST interface converter	Option
Sound measurement	
Sound pressure in 10m (to=-10°C, tamb=32°C)	38,5 dB(A) @ 50Hz, R513A
Data of compressors: see compressor program	
Max. refrigerant charge 90% at 20°C / 68°F	
Receiver type (Standard)	FS152E
R22	16,3 kg
R134a	16,5 kg
R407C	15,6 kg
R404A/R507A	14,4 kg
R407A	15,8 kg
R407F	15,4 kg
R448A	15 kg

R449A	15,1 kg
R450A	16,1 kg
R454C	14,3 kg
R455A	14,2 kg
R513A	16,5 kg
R1234yf	15,0 kg
R1234ze	15,9 kg

Condensing Units

Motor 1 = e.g. LH..E/4TES-12 with 12"HP", primary for air-conditioning (e.g. R22,R407C) and medium temperature application (e.g. R134a, R407F, R407A, R404A, R507A, R22) and air-conditioning with R134a at high ambient temperatures.
Motor 2 = e.g. LH..E/4TES-9 with 8"HP", for medium and low temperature application (e.g. R134a, R407F, R407A, R404A, R507A, R22) and air-conditioning with R134a.

For more information concerning the application range use the "limits" button.

Operation modes for LH..E/4VES-7 to LH../6HE-28 with R22

CIC = liquid injection with low temperature application, suction gas cooled motor.

Specifications for sound emission

The data are based on 50Hz operation.
Sound pressure: Data are valid for free field conditions with a block-shaped reference area in a distance of 10m.
For further information see technical information for sound data.

Legend of connection positions according to "Dimensions":

1 Suction gas valve
2 Discharge gas line
3 Condensate line
4 Refrigerant outlet (liquid line)
5 Pressure relief valve connection
6 Liquid injection (operation without liquid subcooler and with thermostatic expansion valve)
7 Refrigerant inlet at liquid subcooler
8 Refrigerant outlet at liquid subcooler
9 Suction gas line
10 Sight glass
11 Load suspension points
12 Plug for screwed cable gland
13 Cable bushing (for cables ø 9-17 mm) (only ECOLITE)
Dimensions can show tolerances according to EN ISO 13920-B.

Heat radiation

The heat radiation amounts to 2% of the electrical power consumption.

ECOLITE family

ECOLITE - Overview Capacity Control

			Standard ex-factory	Optional ex-factory or retrofit kit
ECOLITE	Housing size	Compressor model	Capacity control (VARISTEP)	Capacity control (VARISTEP)
LHL3E	CE2S	2EES .. 2CES	1x CRII: 50% .. 100%	-
LHL5E	CE3S	4FES .. 4CES	1x CRII: 50% .. 100%	2x CRII: 50% .. 100%
LHL7E	CE4	4VE .. 4NE	1x CRII: 50% .. 100%	2x CRII: 50% .. 100%
ECOLITE	Housing size	Compressor model	Capacity control (VARIPACK with CR)	
LHL7EF	CE4	4VE .. 4NE	FI + 1x CR: 21% .. 100%	-

ECOLITE with VARISTEP

The VARISTEP (CRII) enables precise and efficient quasi-stepless mechanical capacity control based on the principle of blocked suction.

1 CRII means a partial load control range between 50% and 100% refrigeration capacity. This is standard for the ECOLITE with VARISTEP.

For a partial load control range between 10% and 100% refrigeration capacity, an additional (second) CRII can be used as an option.

ECOLITE with VARIPACK and CR

The VARIPACK - an in-house product from BITZER - stands for the highest reliability and the best possible cooperation between compressor, frequency inverter and CR capacity control.

Its speed control enables simple and precise refrigeration capacity regulation.

In the ECOLITE VARIPACK with CR, it regulates within a frequency range of 30 to 70Hz. In combination with the CR, this means a partial load control range between 21% and 100% refrigeration capacity.