MITSUBISHI HEAVY INDUSTRIES

AIR CONDITIONING

THE EXPERTS IN AIR

SPLIT SYSTEM

HEATING AND COOLING SOLUTIONS

PRODUCT REVIEW .COM.AU
2021-25 AWARDS WINNER
MITSUBISHI HEAVY INDUSTRIES BRONTE

PRODUCT REVIEW .COM.AU
2024-25 AWARDS WINNER
MITSUBISHI HEAVY INDUSTRIES AVANTI

ULTIMATE
Customer Satisfaction

With a long-standing history of innovation and independent brand and product award wins, Mitsubishi Heavy Industries Air-Conditioners Australia is a leading supplier of heating and cooling solutions.

UNRIVALLED RELIABILITY
MHIAA are a global company, with a local heart. We are driven by our commitment to innovation, integrity and excellence, strong sales and after-service leadership.

CUSTOMER SATISFACTION
We are committed to building strong community relationships and consistently delivering high-quality, innovative products that meet the evolving needs of our customers.

SUPERIOR TECHNOLOGY
MHIAA has thrived over 25 years by ensuring innovation is at the forefront of our products. With focus on energy efficiency, SMART home connectivity and Clean Air Technology, we are bringing tomorrows technology to consumers today.

AWARD-WINNING PERFORMANCE
MHIAA is the most independently awarded brand of air conditioners in Australia, reflecting our on-going performance in the Australian market, and cementing our position as The Experts in Air.

Avanti® and Bronte® Series have been named by ProductReview as Australia's best split system air-conditioners in 2025 awards.

5 YEARS PARTS AND LABOUR WARRANTY

Mitsubishi Heavy Industries Air-conditioners Australia focuses solely on manufacturing high performance air-conditioners for the Australian market. All our systems are of the highest quality and are backed by a full 5 year parts and labour warranty.

EXCEEDING ENERGY PERFORMANCE STANDARDS

To comply with Australian standards and deliver the most efficient solutions possible to our customers, all Mitsubishi Heavy Industries Air-conditioners Australia systems meet and exceed the Minimum Energy Performance Standards (MEPS).

MHIAA Split Systems

Our award winning split systems offer a quiet and highly energy efficient solution for heating and cooling individual rooms. They are comprised of an indoor unit which is installed on an interior wall or in your ceiling and an outdoor unit which is placed on an exterior wall of your home. All split systems come with a wireless remote control as standard.

Our split systems come in a variety of types (wall mounted, floor mounted and bulkhead), a range of capacities and both cool only and reverse cycle to suit any Aussie home.

All our systems have undergone strict and rigorous testing and quality control measures to ensure they are of the highest standards and will withstand the tough Australian climate.

WALL MOUNTED

- Highly energy efficient
- Convenient features and functions
- Available in range of capacities
- Suitable for any home

FLOOR MOUNTED

- Energy efficient
- Convenient features and functions
- Perfect for colder climates

BULKHEAD

- Super quiet operation
- Discreet design
- Perfect for renovations, new builds
- Convenient features and functions

Inside Our Condenser Technology

IMPROVED HEAT EXCHANGER

Our new and improved heat exchanger has been developed to improve refrigerant distribution and increase the systems effectiveness. The new design features a larger heat exchange area, boosting the unit's overall efficiency.

COATED PCB

To protect against humid weather a protective coating is applied to the circuit board in the outdoor unit, allowing it to withstand Australia's varying weather conditions and ensure the longevity of your system.

BLUE FIN TECHNOLOGY

Mitsubishi Heavy Industries outdoor units are coated with specially formulated layers that assist in preventing the hydrophilicity effect and assists in reducing the corrosion rate of the aluminium section from harsh Australian weather conditions.

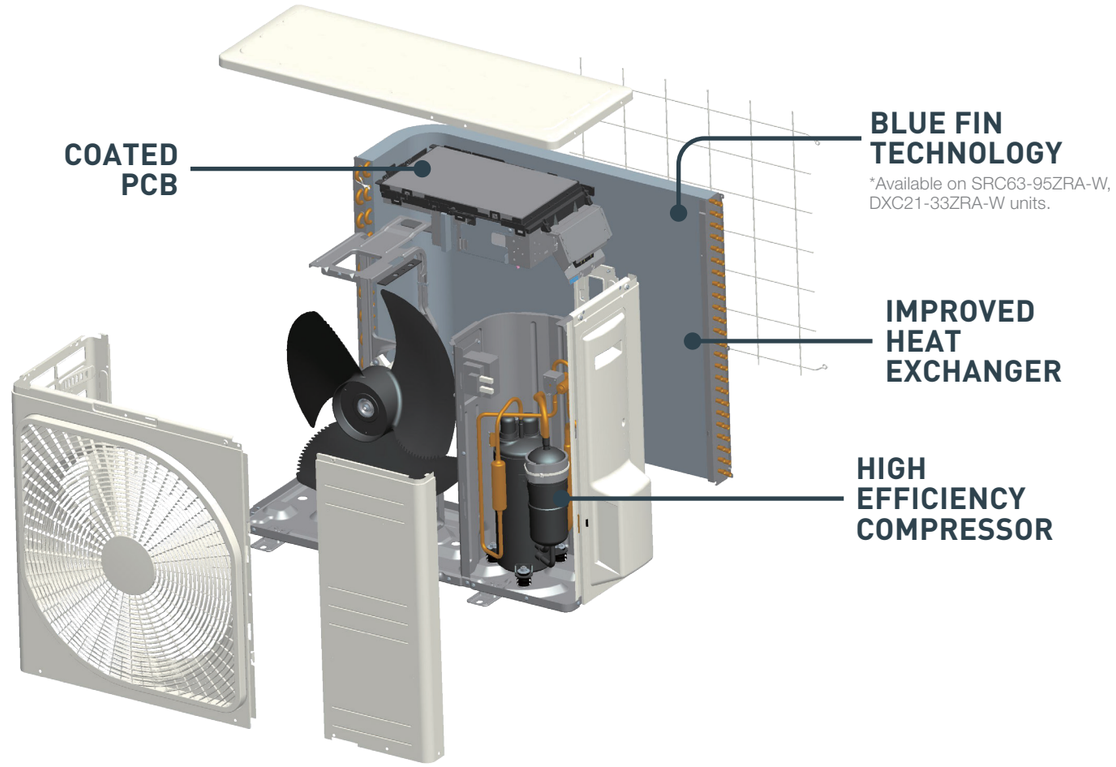

HIGH EFFICIENCY COMPRESSOR

One of the key features that provides Mitsubishi Heavy Industries air-conditioners with their powerful performance is our highly efficient compressor. Combined with a Neodymium motor that uses powerful, rare earth magnets, Mitsubishi Heavy Industries air-conditioners can deliver a higher motor efficiency while producing much less operational noise.

DC PAM INVERTER

The PAM control used in Mitsubishi Heavy Industries air-conditioners helps minimise the loss of electricity and boost the efficiency by allowing the unit to reach the temperature quickly before slowing down the compressor. This allows the unit to save energy while maintaining a comfortable temperature in the room.

WIDE OPERATION RANGE

With our advanced technology and high quality components, Mitsubishi Heavy Industries air-conditioners can operate in ambient outdoor temperatures as low as -20˚C in heating mode and as high as +46˚C in cooling mode.

This permits the installation in areas where the temperature conditions can be considered extreme.

Clean Air Technology

Mitsubishi Heavy Industries' Clean Air Technology is a combination of several different yet specialised components, systems and functions that are designed to work in synchronization to help improve indoor air quality by removing allergens and odours and deactivating mould, bacteria and viruses*. Learn more at mhiaa.com.au/clean-air-technology.

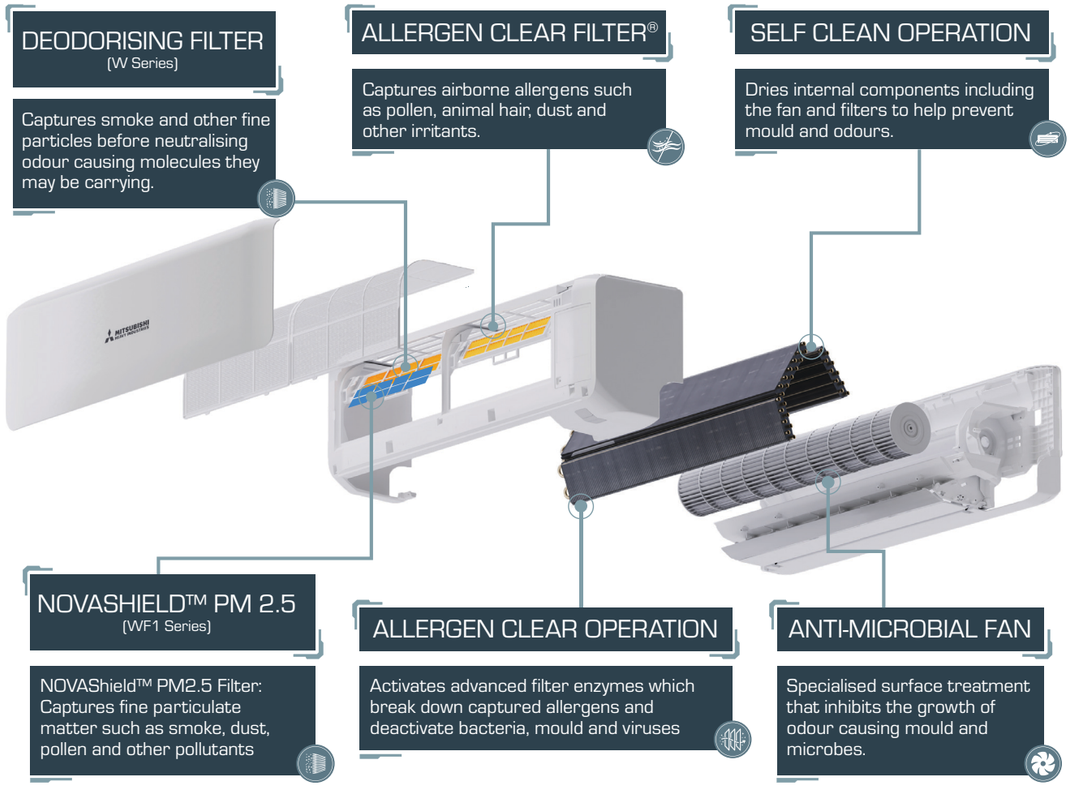

Recent tests have confirmed that the enzyme-urea compound contained within Mitsubishi Heavy Industries' Allergen Clear Filter is effective in the de-activation of SARS-CoV-2, the virus that causes COVID-19[4].

99.998% OF SARS-COV-2 DEACTIVATED BY MHI'S ENZYME-UREA TECHNOLOGY CONTAINED WITHIN MHI'S ALLERGEN CLEAR FILTER®

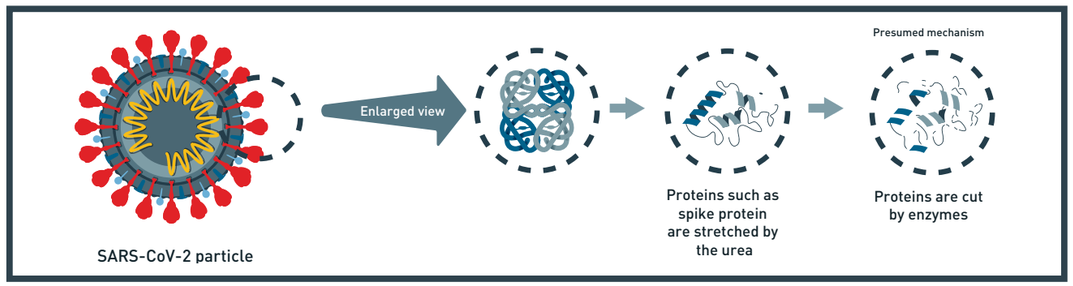

*Excludes Ciara™ series
[1]Test method: ELISA colorimetric method Laboratory: Independent administrative agency national hospital mechanism Sagamihara Hospital, No.1536
[2]Test method: ELISA colorimetric method / ELISA fluorescent method Laboratory: Independent administrative agency national hospital mechanism Sagamihara Hospital, No.1536
[3]Test method: TCID (Infection value 50%) Laboratory: Foundation of Kitazato Environmental Science Center, No.15-0145
[4]Test method: Anti-viral test using severe acute respiratory syndrome coronavirus 2 (SARS-CoV-2) Laboratory: Japan Textile Products Quality and Technology Center Kobe Testing Center

Air Conditioning Sizing Chart

A Class
Insulated roof space, walls and sub floor, full brick or brick veneer construction, average size windows with awnings, full shading south facing aspect, temperate weather conditions.

B Class
Insulated roof space, full brick or brick veneer construction, average size windows with internal shades, north facing aspect, temperate climate.

C Class
Insulated roof space, full brick or brick veneer construction, average size windows with internal shades, east facing aspect or sub tropical climate.

D Class
Little or no insulation, weatherboard, fibro or brick veneer construction, large windows, no shading from the sun westerly facing aspect.

Selection Chart for Cooling and Heating			Room Class			
Model	Capacity		A	B	C	D
			Maximum Floor Area (m²)			
Ciara™ (DXK05ZTLA-WF)	1.5kW	Cooling	15	12	10	7
		Heating	19	16	13	10
Avanti PLUS® (SRK20ZSXA-WF) Avanti® (SRK20ZSA-W / DXK06ZSA-W / DXK06ZSA-WF1) Ciara™ (DXK07ZTLA-WF)	2.0kW	Cooling	20	16	14	12
		Heating	27	23	20	16
Avanti® Cool Only (SRK10YSA-W)	2.5kW	Cooling	25	21	18	15
Avanti PLUS® (SRK25ZSXA-WF) Avanti® (SRK25ZSA-W / DXK09ZSA-W / DXK09ZSA-WF1) Ciara™ (DXK09ZTLA-WF) Akari™ SRR-ZS (SRR25ZS-W) Wera™ SRF-ZS (SRF25ZS-W)	2.5kW	Cooling	25	21	18	15
		Heating	34	28	24	20
Ciara™ (DXK12ZTLA-WF)	3.3kW	Cooling	35	29	25	21
		Heating	40	33	29	24
Avanti® Cool Only (SRK13YSA-W)	3.5kW	Cooling	35	29	25	21
Avanti PLUS® (SRK35ZSXA-WF) Avanti® (SRK35ZSA-W / DXK12ZSA-W / DXK12ZSA-WF1) Akari™ (SRR35ZS-W) Wera™ (SRF35ZS-W)	3.5kW	Cooling	35	29	25	21
		Heating	40	33	29	24
Avanti® Cool Only (SRK18YSA-W)	5.0kW	Cooling	51	43	36	30
Avanti PLUS® (SRK50ZSXA-WF) Avanti® (SRK50ZSA-W / DXK18ZSA-W / DXK18ZSA-WF1) Ciara™ (DXK18ZTLA-WF) Wera™ (SRF50ZSX-W)	5.0kW	Cooling	51	43	36	30
		Heating	58	48	41	34
Avanti PLUS® (SRK60ZSXA-WF)	6.0kW	Cooling	60	50	45	37
		Heating	68	57	48	39
Bronte® (SRK63ZRA-W / DXK21ZRA-W / DXK21ZRA-WF1) Ciara™ (DXK21ZTLA-WF)	6.3kW	Cooling	63	54	47	38
		Heating	71	58	50	42
Bronte® Cool Only (SRK24YRA-W)	7.1kW	Cooling	71	59	51	42
Bronte® (SRK71ZRA-W / DXK24ZRA-W / DXK24ZRA-WF1) Ciara™ (DXK24ZTLA-WF)	7.1kW	Cooling	71	59	51	42
		Heating	80	67	57	47
Bronte® (SRK80ZRA-W / DXK28ZRA-W / DXK28ZRA-WF1)	8.0kW	Cooling	80	67	57	47
		Heating	89	73	64	52
Bronte® (SRK95ZRA-W / DXK33ZRA-W / DXK33ZRA-WF1)	9.5kW	Cooling	95	78	68	57
		Heating	105	87	76	60
Bronte® (SRK100AVNAWZR / SRK100AVSAWZR / SRK100AVNAWZRF / SRK100AVSAWZRF)	10.0kW	Cooling	100	83	73	62
		Heating	110	92	81	68

* This guide has been developed to assist in model selection for the majority of normal residential air conditioning situations, and as per AS/NZS 3823 performance data. MHIAA recommend a heat load survey should be conducted by a licensed air conditioning installer. For R32 systems, minimum installation area for indoor unit and other AU/NZS Standards apply. Products are to be installed by a licensed and qualified person only.

AVANTIPLUS® WF Range

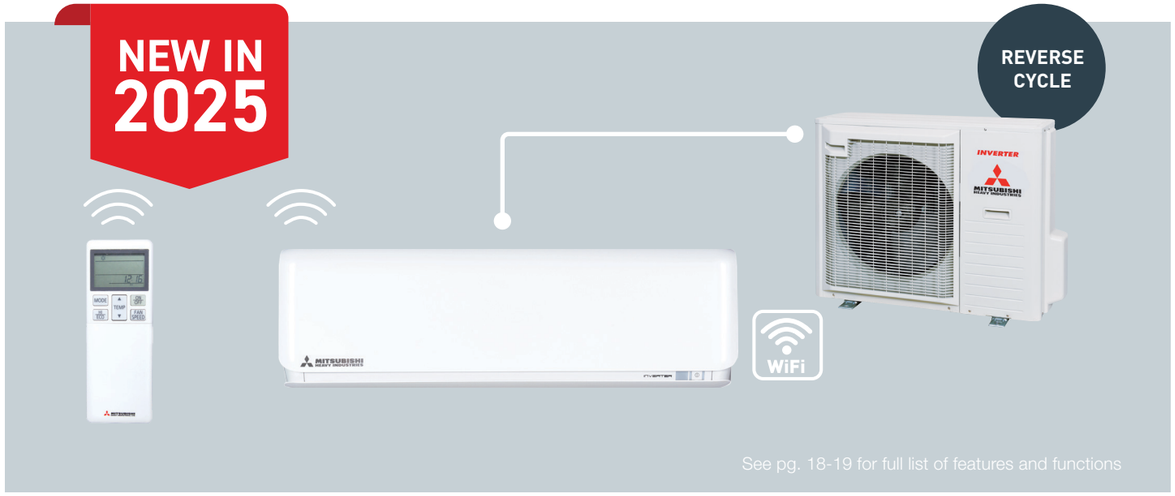

See pg. 18-19 for full list of features and functions

Wall Mounted
2.0kW | 2.5kW | 3.5kW | 5.0kW | 6.0kW

AvantiPlus® is one of our quietest and most energy efficient split systems. It incorporates features such as an energy saving motion sensor and improved automatic mode for precise temperature control. Plus, now it comes with the added convenience of built-in Wi-Fi control.

BUILT-IN WI-FI & VOICE CONTROL

AvantiPlus WF range includes built-in Wi-Fi and voice control compatibility^. Access a range of functions remotely using your smartphone and the Smart M-Air App.

ENERGY EFFICIENCY

Motion Sensor that detects room occupancy and adjusts cooling/heating to save energy. Eco Operation function optimises temperature and fan speed for efficient performance helping to reduce power consumption

CLEAN AIR TECHNOLOGY

Captures and neutralises fine smoke particles, allergens, odours, bacteria and viruses while also inhibiting growth of mould within the unit.

SILENT OPERATION

Set periods of time where the unit will operate with even further reduced noise levels.

AVANTI PLUS SERIES				2.0kW	2.5kW	3.5kW	5.0kW	6.0kW
Cooling Capacity			kW	2.0	2.5	3.5	5.0	6.1
Heating Capacity			kW	2.7	3.2	4.3	6.0	6.8
Star Energy Rating (GEMS 2019)	Hot	Cooling	Stars	★★★★★½ (5.5)	★★★★★ (5)	★★★★★ (5)	★★★★ (4)	★★★½ (3.5)
		Heating		★★★★½ (4.5)	★★★★½ (4.5)	★★★★ (4)	★★★½ (3.5)	★★★½ (3.5)
	Average	Cooling		★★★★½ (4.5)	★★★★½ (4.5)	★★★★ (4)	★★★½ (3.5)	★★★ (3)
		Heating		★★★★ (4)	★★★★ (4)	★★★½ (3.5)	★★★ (3)	★★★ (3)
	Cold	Cooling		★★★★½ (4.5)	★★★★½ (4.5)	★★★★½ (4.5)	★★★½ (3.5)	★★★½ (3.5)
		Heating		★★★½ (3.5)	★★★½ (3.5)	★★★ (3)	★★½ (2.5)	★★½ (2.5)

SRC20-60ZSXA-W outdoor unit shown.

^Voice control & voice commands available in conjunction with 3rd party smart devices such as Google Nest® or Amazon® Alexa® Devices.
Note: 1x user account per smartphone with up to 4x individual user accounts per individual Wi-Fi device
Some functions may not be available as voice commands or accessible via 3rd party apps.
Smart M-AIR App compatible models: Android OS8-12 & Apple iOS 14-18

OTHER CONTROL OPTIONS
(SOLD SEPARATELY)

WIRED

AVANTI® Series

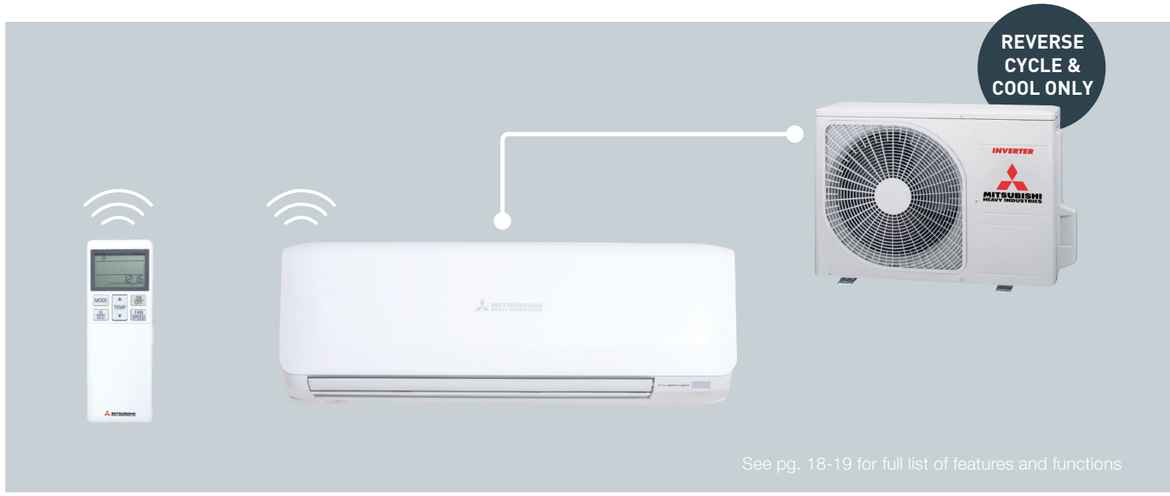

See pg. 18-19 for full list of features and functions

Wall Mounted
2.0kW | 2.5kW | 3.5kW | 5.0kW

PRODUCT REVIEW .COM.AU
2024-25 AWARDS WINNER
MITSUBISHI HEAVY INDUSTRIES AVANTI

Named by ProductReview as the best split system of 2025, the Avanti® split system features a sleek and stylish design and incorporates a range of convenient features and functions. Coming in both reverse cycle and cool only models, the Avanti® is best suited to small and medium spaces.

HIGH POWER OPERATION

Provides 15mins of boosted power allowing you to quickly heat or cool your home before returning to normal operation.

3D AUTO MODE

Activates three independent motors which deliver an effective and efficient airflow throughout the room.

LED BRIGHTNESS CONTROL

Adjust the brightness of the LED display on the indoor unit to minimise disturbance and ensure a good nights sleep.

CLEAN AIR TECHNOLOGY

Captures and neutralises fine smoke particles, allergens, odours bacteria and viruses while also inhibiting growth of mould within the unit*

AVANTI SERIES				2.0kW	2.5kW	2.5kW (Cool Only)	3.5kW	3.5kW (Cool Only)	5.0kW	5.0kW (Cool Only)
Cooling Capacity			kW	2.0	2.5	2.5	3.5	3.5	5.0	5.0
Heating Capacity			kW	2.7	3.2	N/A	3.7	N/A	5.8	N/A
Star Energy Rating (GEMS 2019)	Hot	Cooling	Stars	★★★★★½ (4.5)	★★★★★½ (4.5)	★★★★★½ (4.5)	★★★★★ (4)	★★★★★ (4)	★★★½ (3.5)	★★★½ (3.5)
		Heating		★★★½ (3.5)	★★★½ (3.5)	N/A	★★★½ (3.5)	N/A	★★★½ (3.5)	N/A
	Average	Cooling		★★★★ (4)	★★★½ (3.5)	★★★½ (3.5)	★★★½ (3.5)	★★★½ (3.5)	★★★ (3)	★★★ (3)
		Heating		★★★½ (3.5)	★★★ (3)	N/A	★★★ (3)	N/A	★★½ (2.5)	N/A
	Cold	Cooling		★★★★ (4)	★★★½ (3.5)	★★★½ (3.5)	★★★½ (3.5)	★★★½ (3.5)	★★★ (3)	★★★ (3)
		Heating		★★★ (3)	★★★ (3)	N/A	★★½ (2.5)	N/A	★★ (2)	N/A

DXC09-12ZSA-W / SRC25-35ZSA-W outdoor unit shown.
*Allergen Clear Operation not available in Cool Only products.

OTHER CONTROL OPTIONS
(SOLD SEPARATELY)

Wi-Fi WIRED

AVANTI® WF1 Series

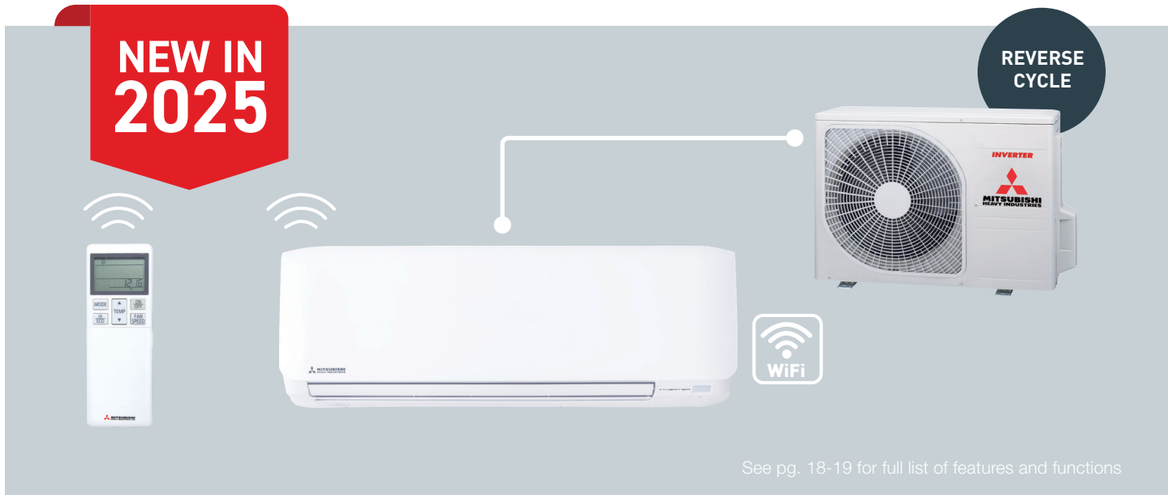

See pg. 18-19 for full list of features and functions

Wall Mounted
2.0kW | 2.5kW | 3.5kW | 5.0kW

PRODUCT REVIEW .COM.AU
2024-25 AWARDS WINNER
MITSUBISHI HEAVY INDUSTRIES AVANTI

Control your comfort anytime, anywhere: Our best-selling Avanti® Series now with built-in Wi-Fi control. Featuring a sleek and stylish design, and new logo placement this unit is designed to compliment any home. Available in reverse cycle, it's best suited for small to medium spaces.

BUILT-IN WI-FI & VOICE CONTROL

AvantiPlus WF range includes built-in Wi-Fi and voice control compatibility^. Access a range of functions remotely using your smartphone and the Smart M-Air App.

HIGH POWER OPERATION

Provides 15mins of boosted power allowing you to quickly heat or cool your home before returning to normal operation.

CLEAN AIR TECHNOLOGY

Effectively capture fine particulate matter (PM2.5), including dust, pollen, smoke, and other pollutants with our NOVAShield™ Filter.

LED BRIGHTNESS CONTROL

Adjust the brightness of the LED display on the indoor unit to minimise disturbance and ensure a good nights sleep.

AVANTI SERIES				2.0kW	2.5kW	3.5kW	5.0kW
Cooling Capacity			kW	2.0	2.5	3.5	5.0
Heating Capacity				2.7	3.2	3.7	5.8
Star Energy Rating (GEMS 2019)	Hot	Cooling	Stars	★★★★★ (5)	★★★★★ (5)	★★★★½ (4.5)	★★★½ (3.5)
		Heating		★★★½ (3.5)	★★★½ (3.5)	★★★½ (3.5)	★★★½ (3.5)
	Average	Cooling		★★★★ (4)	★★★★ (4)	★★★★ (4)	★★★ (3)
		Heating		★★★½ (3.5)	★★★ (3)	★★★ (3)	★★½ (2.5)
	Cold	Cooling		★★★★ (4)	★★★★ (4)	★★★★ (4)	★★★½ (3.5)
		Heating		★★★ (3)	★★★ (3)	★★½ (2.5)	★★ (2)

^Voice control & voice commands available in conjunction with 3rd party smart devices such as Google Nest® or Amazon® Alexa® Devices.
Note: 1x user account per smartphone with up to 4x individual user accounts per individual Wi-Fi device
Some functions may not be available as voice commands or accessible via 3rd party apps.
Smart M-AIR App compatible models: Android OS8-12 & Apple iOS 14-18

OTHER CONTROL OPTIONS
(SOLD SEPARATELY)

WIRED

BRONTE® Series

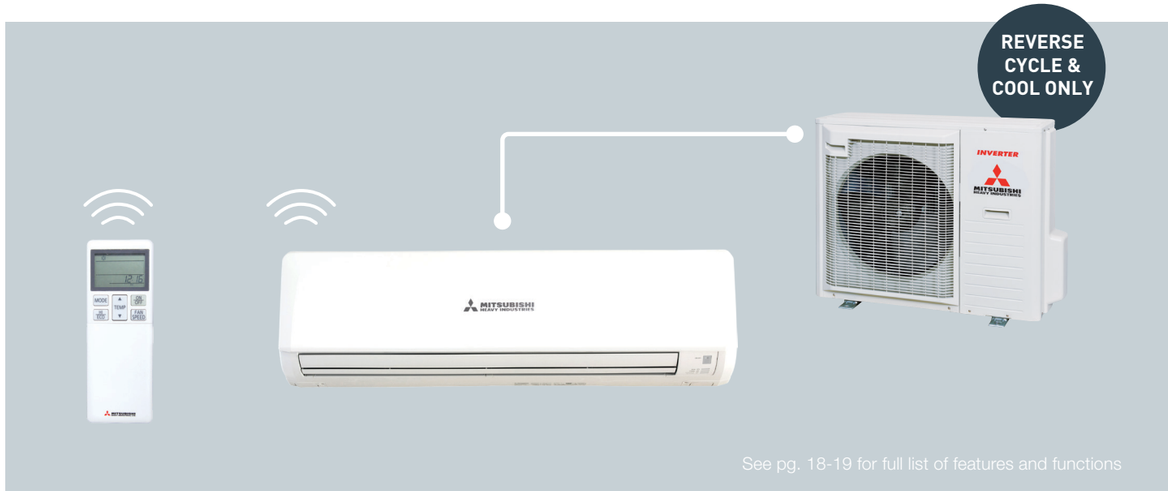

See pg. 18-19 for full list of features and functions

Wall Mounted
6.3kW | 7.1kW | 8.0kW | 9.5kW | 10kW

PRODUCT REVIEW .COM.AU
2021-25 AWARDS WINNER
MITSUBISHI HEAVY INDUSTRIES BRONTE

Named by ProductReview as the best split system of 2021-25, the Bronte® series of split systems incorporates advanced fan blade technology to efficiently deliver an industry leading, long reach airflow of up to 18m*. Available in both reverse cycle and cool only models, the Bronte® is best suited to medium to larger spaces.

HIGH POWER OPERATION

Provides 15mins of boosted power allowing you to quickly heat or cool your home before returning to normal operation.

JET AIR TECHNOLOGY

Advanced blade technology used in development of jet engines to deliver industry leading long reach airflow of up to 18m*

SILENT OPERATION

Set periods of time where the unit will operate with even further reduced noise levels.

CLEAN AIR TECHNOLOGY

Captures and neutralises fine smoke particles, allergens, odours, bacteria and viruses while inhibiting growth of mould within the unit**.

BRONTE SERIES				6.3kW	7.1kW	7.1kW (Cool Only)	8.0kW	9.5kW	10.0kw
Cooling Capacity			kW	6.3	7.1	7.1	8.0	9.5	10
Heating Capacity				7.1	8.0	N/A	9.0	10.3	11.2
Star Energy Rating (GEMS 2019)	Hot	Cooling	Stars	★★★★ (4)	★★★½ (3.5)	★★★½ (3.5)	★★★½ (3.5)	★★★½ (3.5)	★★★ (3)
		Heating		★★★½ (3.5)	★★★ (3)	N/A	★★★ (3)	★★★½ (3.5)	★★½ (2.5)
	Average	Cooling		★★★½ (3.5)	★★★½ (3.5)	★★★½ (3.5)	★★★ (3)	★★★ (3)	★★½ (2.5)
		Heating		★★★ (3)	★★½ (2.5)	N/A	★★½ (2.5)	★★½ (2.5)	★½ (1.5)
	Cold	Cooling		★★★½ (3.5)	★★★½ (3.5)	★★★½ (3.5)	★★★½ (3.5)	★★★½ (3.5)	★★★ (3)
		Heating		★★½ (2.5)	★★ (2)	N/A	★★ (2)	★★ (2)	★ (1)

DXC24-28ZRA-W / SRC71-80ZRA-W outdoor unit shown.
10kW available in both single and three phase.
*7.1kW, 8.0kW, 9.5kW & 10kW models in cooling mode.
**Allergen Clear Operation not available in Cool Only products.

OTHER CONTROL OPTIONS
(SOLD SEPARATELY)

Wi-Fi WIRED

BRONTE® WF1 Series

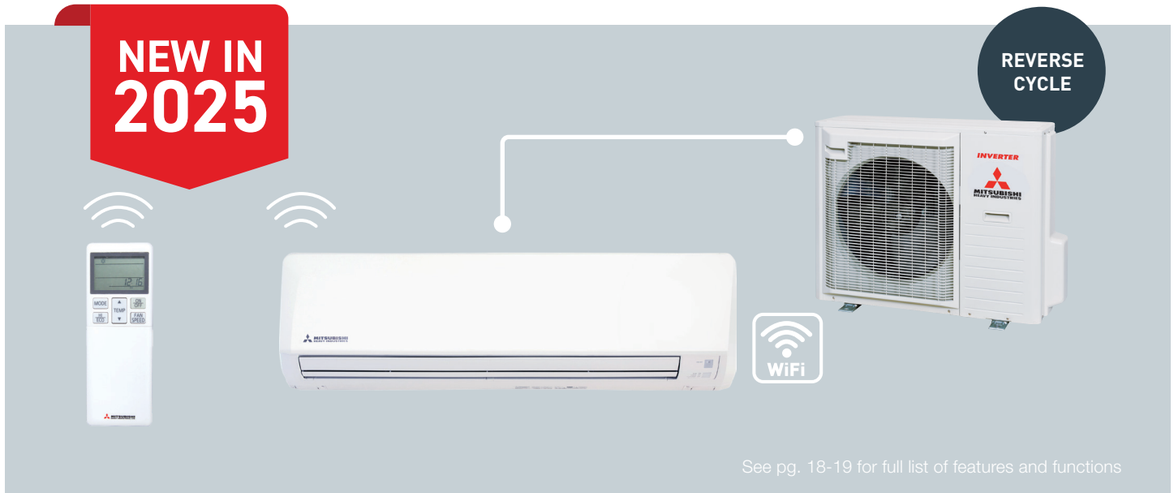

See pg. 18-19 for full list of features and functions

Wall Mounted
6.3kW | 7.1kW | 8.0kW | 9.5kW | 10kW

PRODUCT REVIEW .COM.AU
2021-25 AWARDS WINNER
MITSUBISHI HEAVY INDUSTRIES BRONTE

Our renowned Bronte® Series is perfect for cooling and heating of larger spaces, and now it comes with the added convenience of built-in Wi-Fi control! Featuring advanced fan blade technology Bronte delivers industry leading, long reach airflow of up to 18m*. Available in reverse cycle, it's best suited for medium to larger spaces.

BUILT-IN WI-FI & VOICE CONTROL

AvantiPlus WF range includes built-in Wi-Fi and voice control compatibility^. Access a range of functions remotely using your smartphone and the Smart M-Air App.

JET AIR TECHNOLOGY

Advanced blade technology used in development of jet engines to deliver industry leading long reach airflow of up to 18mtr*

CLEAN AIR TECHNOLOGY

Effectively capture fine particulate matter (PM2.5), including dust, pollen, smoke, and other pollutants with our NOVAShield™ Filter.†

HIGH POWER OPERATION

Provides 15mins of boosted power allowing you to quickly heat or cool your home before returning to normal operation.

BRONTE SERIES				6.3kW	7.1kW	8.0kW	9.5kW	10.0kw
Cooling Capacity			kW	6.3	7.1	8.0	9.5	10
Heating Capacity			kW	7.1	8.0	9.0	10.3	11.2
Star Energy Rating (GEMS 2019)	Hot	Cooling	Stars	★★★★ (4)	★★★★ (4)	★★★½ (3.5)	★★★½ (3.5)	★★★ (3)
		Heating		★★★½ (3.5)	★★★ (3)	★★★ (3)	★★★½ (3.5)	★★½ (2.5)
	Average	Cooling		★★★½ (3.5)	★★★½ (3.5)	★★★½ (3.5)	★★★½ (3.5)	★★½ (2.5)
		Heating		★★★ (3)	★★½ (2.5)	★★½ (2.5)	★★½ (2.5)	★½ (1.5)
	Cold	Cooling		★★★★ (4)	★★★½ (3.5)	★★★½ (3.5)	★★★½ (3.5)	★★★ (3)
		Heating		★★½ (2.5)	★★ (2)	★★ (2)	★★ (2)	★ (1)

DXC24-28ZRA-W / SRC71-80ZRA-W outdoor unit shown.
† NOVAShield PM2.5 Filter is not available on 10.0kW models
*7.1kW, 8.0kW, 9.5kW & 10kW models in cooling mode.
^Voice control & voice commands available in conjunction with 3rd party smart devices such as Google Nest® or Amazon® Alexa® Devices.
Note: 1x user account per smartphone with up to 4x individual user accounts per individual Wi-Fi device
Some functions may not be available as voice commands or accessible via 3rd party apps.
Smart M-AIR App compatible models: Android OS8-12 & Apple iOS 14-18

OTHER CONTROL OPTIONS
(SOLD SEPARATELY)

WIRED

CIARA™ Series

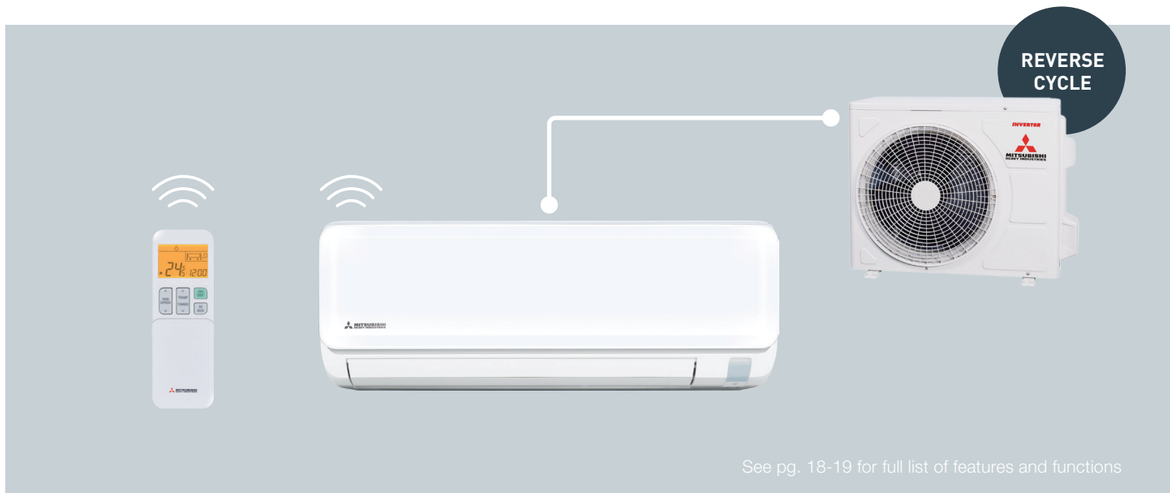

See pg. 18-19 for full list of features and functions

Wall Mounted
1.5kW | 2.0kW | 2.5kW | 3.3kW | 5.0kW | 6.3kW | 7.1kW

The NEW Ciara™ series of split systems incorporates stylish Italian design, with rounded contours and a sleek finish. Compact and lightweight, the Ciara™ series is packed with features including Wi-Fi built-in and Voice control compatibility. Available in reverse cycle models the Ciara™ series is perfect for small to medium spaces.

BUILT-IN WI-FI

Wi-Fi & voice control compatibility now included as standard*. Control your air-conditioner anywhere, anytime with your smartphone.

BACKLIT REMOTE CONTROL

Easy to use remote with backlit screen for dark/night time operation. Accurate temperature control via 0.50C increments.

SILENT MODES

Two levels of silent mode are available to further reduce the outdoor unit noise level.

COMPACT DESIGN

A compact and lightweight design allows for improved installation flexibility and installation into smaller spaces such as apartments.

CIARA SERIES				1.5kW	2.0kW	2.5kW	3.3kW	5.0kW	6.3kW	7.1kW
Cooling Capacity			kW	1.5	2.0	2.5	3.3	5.0	6.3	7.1
Heating Capacity			kW	2.0	2.7	3.0	3.8	5.8	7.1	8.0
Star Energy Rating (GEMS 2019)	Hot	Cooling	Stars	★★½ (2.5)	★★★½ (3.5)	★★★★ (4.0)	★★★½ (3.5)	★★★ (3.0)	★★★½ (3.5)	★★★½ (3.5)
		Heating		★★★½ (3.5)	★★★½ (3.5)	★★★½ (3.5)	★★★½ (3.5)	★★★ (3.0)	★★★ (3.0)	★★★ (3.0)
	Average	Cooling		★½ (1.5)	★★½ (2.5)	★★★ (3.0)	★★★ (3.0)	★★★ (3.0)	★★★½ (3.5)	★★★ (3.0)
		Heating		★★★(3.0)	★★★(3.0)	★★★(3.0)	★★★(3.0)	★★½ (2.5)	★★½ (2.5)	★★½ (2.5)
	Cold	Cooling		★½ (1.5)	★★½ (2.5)	★★★ (3.0)	★★★ (3.0)	★★★ (3.0)	★★★½ (3.5)	★★★½ (3.5)
		Heating		★★★(3.0)	★★½ (2.5)	★★½ (2.5)	★★½ (2.5)	★★ (2.0)	★★ (2.0)	★★ (2.0)

DXC05ZTLA-W outdoor unit shown.
*Voice control & voice commands available in conjunction with 3rd party smart devices such as Google Nest® or Amazon® Alexa® Devices.
Note: 1x user account per smartphone with up to 4x individual user accounts per individual Wi-Fi device
Some functions may not be available as voice commands or accessible via 3rd party apps.
Smart M-AIR App compatible models: Android OS8-13 & Apple iOS 14-18

OTHER CONTROL OPTIONS
(SOLD SEPARATELY)

WIRED

WERA® Series

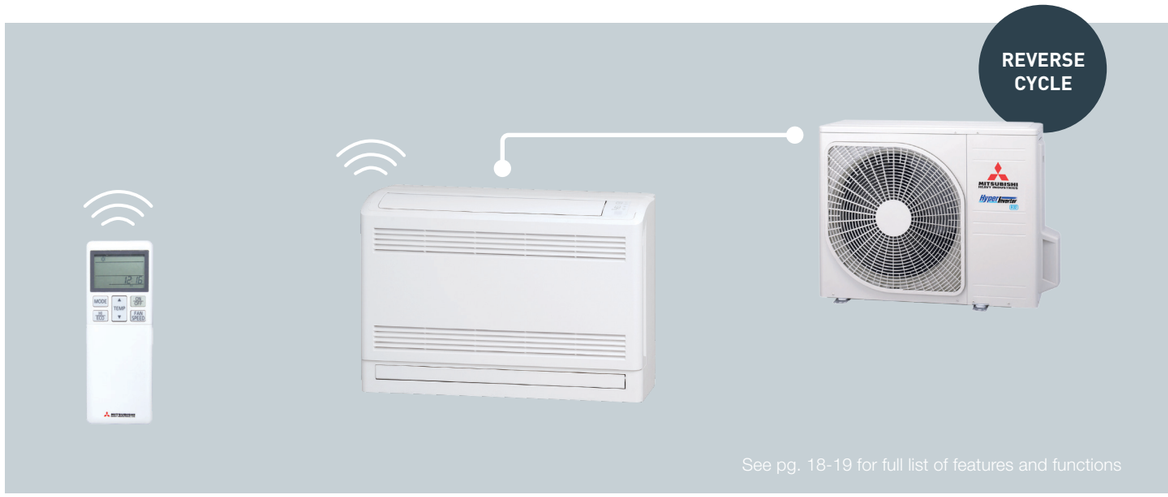

Floor Standing Systems
2.5kW | 3.5kW | 5.0kW

The Wera™ series of floor standing systems are the perfect solution when wall space is at a premium. The indoor unit is installed close to the floor and can be placed under a window, semi-recessed into the wall or mounted in a convenient location.

HIGH POWER OPERATION
Provides 15mins of boosted power allowing you to quickly heat or cool your home before returning to normal operation.

MEMORY LOUVRE
Set the louvre at the desired angle. The unit will automatically return the louvres to this position on every subsequent start up.

SILENT OPERATION
Set periods of time where the unit will operate with even further reduced noise levels.

CLEAN AIR TECHNOLOGY
Captures and neutralises fine smoke particles, allergens, odours, bacteria and viruses while also inhibiting growth of mould within the unit.

WERA SERIES				2.5kW	3.5kW	5.0kW
Cooling Capacity			kW	2.5	3.5	5.0
Heating Capacity				3.4	4.5	6.0
Star Energy Rating (GEMS 2019)	Hot	Cooling	Stars	★★★★ (4)	★★★★ (4)	★★★½ (3.5)
		Heating		★★★½ (3.5)	★★★ (3)	★★★ (3)
	Average	Cooling		★★★½ (3.5)	★★★½ (3.5)	★★★ (3)
		Heating		★★★ (3)	★★½ (2.5)	★★½ (2.5)
	Cold	Cooling		★★★½ (3.5)	★★★½ (3.5)	★★★ (3)
		Heating		★★½ (2.5)	★★ (2)	★★ (2)

SRC50ZSXA-W outdoor unit shown.

OTHER CONTROL OPTIONS
(SOLD SEPARATELY)

Wi-Fi WIRED

AKARI® Series

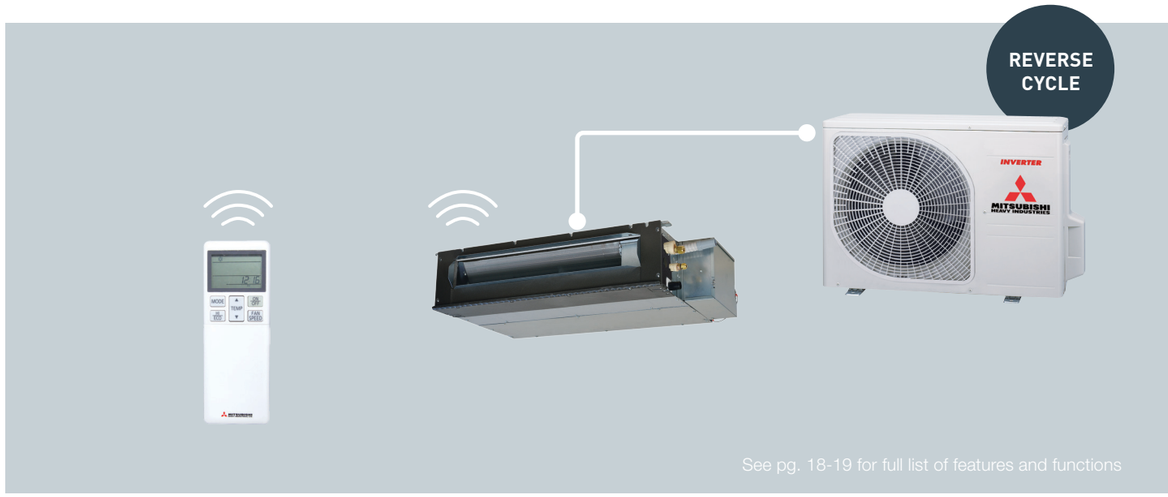

Bulkhead Systems
2.5kW | 3.5kW | 5.0kW | 5.6kW

The Akari™ series of low profile bulkhead systems are designed to sit within your ceiling space and distribute air via discreet grilles. These compact units require no ducting and are perfect for renovated spaces and applications such as apartments where space is at a premium.

HIGH POWER OPERATION
Provides 15mins of boosted power allowing you to quickly heat or cool your home before returning to normal operation.

SUPER QUIET OPERATION
The Akari series offers some of the quietest operation levels on the market achieving 24 dB(A) on low fan mode.

SILENT OPERATION
Set periods of time where the unit will operate with even further reduced noise levels.

SELF CLEAN OPERATION
Dries the indoor unit internal components, preventing the growth of mould.

AKARI SERIES				2.5kW	3.5kW	5.0kW	5.6kW
Cooling Capacity			kW	2.5	3.5	5.0	5.6
Heating Capacity				3.4	4.2	5.4	6.7
Star Energy Rating (GEMS 2019)	Hot	Cooling	Stars	★★★½ (3.5)	★★★½ (3.5)	★★★ (3)	★★★ (3)
		Heating		★★★½ (3.5)	★★★ (3)	★★★½ (3.5)	★★★ (3)
	Average	Cooling		★★★ (3)	★★★ (3)	★★★ (3)	★★½ (2.5)
		Heating		★★★ (3)	★★½ (2.5)	★★½ (2.5)	★★½ (2.5)
	Cold	Cooling		★★★ (3)	★★★ (3)	★★★ (3)	★★★ (3)
		Heating		★★½ (2.5)	★★½ (2.5)	★★ (2)	★★ (2)

SRC25-35ZSA-W outdoor unit shown.

OTHER CONTROL OPTIONS
(SOLD SEPARATELY)

Wi-Fi WIRED

Wi-Fi Solution

AvantiPlus® WF | Avanti® WF1 | Bronte® WF1 | Ciara® WF Ranges

SMART M-AIR APP WI-FI CONTROL

The Smart M-Air app allows you to control your air-conditioning system from anywhere at anytime via either Wi-Fi or the internet*.

- Control your system using your smart device (iPhone, Android) via the Smart M-Air app.
- Control the set temperature, operation mode and fan speed remotely.
- Set multiple operation timers.
- View power usage.
- Control your system using Voice Command via your Google or Amazon smart speaker device*.

M-Air

GET IT ON Google Play

Download on the App Store

Compatible with

Amazon Alexa Google Assistant

*Voice control & voice commands available in conjunction with 3rd party smart devices such as Google Nest® or Amazon® Alexa® Devices. Note: 1x user account per smartphone with up to 4x individual user accounts per individual Wi-Fi device. Some functions may not be available as voice commands or accessible via 3rd party apps. Smart M-AIR App compatible models: Android OS8-12 & Apple iOS 14-18.

VOICE CONTROL

- Control your system via the Smart M-Air app and your smart speaker.

SMART SPEAKER

OK Google, Turn down the temperature in the living room

Alexa, Turn off the bedroom

AMAZON ALEXA™

FUNCTIONS

- Turn air-conditioner On/Off
- Change operating mode (Auto/Cool/Heat)
- Change set temperature
- Checking operating condition
- Detect air-conditioner

GOOGLE ASSISTANT™

FUNCTIONS

- Turn air-conditioner On/Off
- Change operating mode (Auto/Cool/Heat/Fan/Dry)
- Change set temperature
- Checking operating condition
- Synchronise air-conditioners

Controlling your device with AC Cloud Control app requires aforementioned Wi-Fi adaptors and working internet or Wi-Fi connection. Google Account required for use with Google devices. Features and services may change without notice. Google is a trademark of Google LLC.

COMPACT & CONNECTED

CIARA™ SERIES ZTLA

For more details, please see page 13.

Features and Functions

	FEATURE/FUNCTION	DESCRIPTION	AVANTI	AVANTI WF1	AVANTI COOL ONLY	AVANTI PLUS WF	BRONTE	BRONTE WF1	BRONTE COOL ONLY	CIARA	WERA	AKARI
ENERGY SAVING	Fuzzy Auto Mode	Uses algorithms to determine the best operating mode, temperature and automatically adjusts the inverter frequency.	■	■	■	■	■	■	■	■	■	■
ENERGY SAVING	Eco Operation	Automatically adjusts the set temperature based on the detected human activity and switches the unit off when no activity is detected.				■						
ENERGY SAVING	Economy Mode	The unit operates at a slightly reduced capacity to reduce power consumption while maintaining a comfortable room temperature.	■	■	■		■	■	■	■	■	■
AIRFLOW	Jet Air Technology	Advanced fan blade technology, used in the development of jet engines, efficiently delivers a powerful yet quiet and evenly distributed airflow	■	■	■	■	■	■	■	■		
AIRFLOW	High Power Operation	Provides 15mins of boosted power to quickly heat or cool your home. Perfect for when you first turn on the unit.	■	■	■	■	■	■	■	■	■	■
AIRFLOW	3D Auto	Activates three independent motors which effectively and efficiently distributes an even airflow.	■	■	■	■	■	■	■	■		
AIRFLOW	Auto Louvre Mode	Depending on whether the unit is in heating or cooling mode this will automatically set the louvre at the optimum angle for even air distribution.	■	■	■	■	■	■	■	■	■	
AIRFLOW	Memory Louvre	Set the louvre at the desired angle. The unit will automatically return the louvres to this position on every subsequent start up.	■	■	■	■	■	■	■	■	■	
AIRFLOW	Up/Down Louvre Swing	The horizontal louvres will automatically swing up and down for even air distribution.	■	■	■	■	■	■	■	■	■	
AIRFLOW	Right/Left Louvre Swing	The vertical louvres will automatically swing left and right for even air distribution.	■	■	■	■	■	■	■	■	■	
AIRFLOW	Air Outlet Selection	Select whether the airflow is distributed via the upper outlet, the lower outlet or both.									■	
AIRFLOW	Positioning of Installation	Manually set the horizontal airflow direction to ensure even air distribution in situations where the indoor unit is installed in close proximity to a wall.	■	■	■	■	■	■	■	■		
CLEAN AIR TECHNOLOGY	Allergen Clear Operation	Multi-stage operation that activates filter enzymes, neutralising captured allergens such as pollen, dust and hair.	■	■		■	■	■		■		
CLEAN AIR TECHNOLOGY	Self-Clean Operation	Dries the indoor unit components by running the fan on ultra-low mode, preventing the growth of mould. Designed to be run regularly after use.	■	■	■	■	■	■	■	■	■	■
CLEAN AIR TECHNOLOGY	Photocatalytic Deodorizing Filter	Easy to clean filter that catches airborne particles before neutralising the odour causing molecules within them.	■		■	■	■		■		■	
CLEAN AIR TECHNOLOGY	Allergen Clear Filter	Captures airborne allergens such as hair, pollen and dust particles before neutralising them and any bacteria using specially formulated enzymes.	■	■		■	■	■		■	■	
CLEAN AIR TECHNOLOGY	Anti-Microbial Fan	Specialised surface treatment that inhibits the growth of odour causing mould and microbes.	■	■	■	■	■	■	■	■		
	NovaShield PM2.5 Filter	Captures fine particulate matter such as smoke, dust, pollen and other pollutants.		■				■				

Features and Functions

	FEATURE/FUNCTION	DESCRIPTION	AVANTI	AVANTI WF1	AVANTI COOL ONLY	AVANTI PLUS WF	BRONTE	BRONTE WF1	BRONTE COOL ONLY	CIARA	WERA	AKARI
COMFORT AND CONVENIENCE	Dry Operation	Reduces humidity by removing moisture from the air without effecting the indoor temperature.	■	■	■	■	■	■	■	■	■	■
COMFORT AND CONVENIENCE	Silent Operation	Set periods of time where the unit will operate with reduced noise levels, perfect for night time and an uninterrupted sleep.	■	■	■	■	■	■	■	■	■	■
COMFORT AND CONVENIENCE	Built-in Wi-Fi	Control your system anywhere, anytime with your smartphone via Wi-Fi & voice control included as standard		■		■		■		■		
COMFORT AND CONVENIENCE	Night Setback	Designed for the colder seasons, this function ensures the room temperature is kept at around 10˚C, even while unoccupied.	■	■		■	■	■		■	■	■
COMFORT AND CONVENIENCE	Comfort Start-up	When using the ON-TIMER function, the unit will switch on slightly earlier than the SET time, to ensure the optimum temperature is reached at the ON TIME.	■	■	■	■	■	■	■	■	■	■
COMFORT AND CONVENIENCE	Weekly Timer	Set up to 4 timer operations a day (max 28 per week). Once set, the unit will turn on and off at the specified times of the day repeatedly.	■	■	■	■	■	■	■	■	■	■
COMFORT AND CONVENIENCE	Sleep Timer	Set a pre-determined amount of time between 30 and 240 mins that your unit will operate for before switching off.	■	■	■	■	■	■	■	■	■	■
COMFORT AND CONVENIENCE	On/Off Timer	Set your unit to turn on and off once, at specific times, within a 24 hour period. Unit will then turn on and off at the specified times every day.	■	■	■	■	■	■	■	■	■	■
COMFORT AND CONVENIENCE	Preset Operation	The desired preset operation mode can be enabled with a single touch of a button.	■	■	■	■				■	■	■
COMFORT AND CONVENIENCE	Child Lock	Lock the remote control to prevent little ones from changing functions and other settings. Useful for families with curious young children.	■	■	■	■	■	■	■	■	■	■
COMFORT AND CONVENIENCE	LED Brightness Adjustment	Adjust the brightness of the LED display on the indoor unit to minimise disturbance and ensure a good nights sleep.	■	■	■	■				■		
COMFORT AND CONVENIENCE	Motion Sensor	Automatically adjusts the set temperature based on human activity detected in the room. Switches the unit off when no activity is detected to save energy.				■						
COMFORT AND CONVENIENCE	Auto Operation	The unit will automatically select from heating, cooling or dry operation mode.	■	■	■	■	■	■	■	■	■	■
MAINTENANCE & PREVENTION	Microcomputer -Operated Defrosting	Automatically activated during low ambient temperatures to prevent the frosting of the outdoor heat exchanger.	■	■		■	■	■		■	■	■
MAINTENANCE & PREVENTION	Self-Diagnostic Function	In the unlikely event of a fault the internal microcomputer automatically runs a diagnostic of the system. This enables a service agent to quickly isolate and repair any issues.	■	■	■	■	■	■	■	■	■	■
MAINTENANCE & PREVENTION	Back-up Switch	If the remote control fails, the unit can be operated via an on/off switch on the indoor unit.	■	■	■	■	■	■	■	■	■	
MAINTENANCE & PREVENTION	Auto Restart Function	If there is a temporary loss of power, the unit will automatically restart in the same operating mode it was in when power is restored.	■	■	■	■	■	■	■	■	■	■
MAINTENANCE & PREVENTION	Removable Cover Panel	Removable front cover allowing access for easy maintenance and cleaning.	■	■	■	■	■	■	■	■	■	

PRODUCT SPECIFICATIONS

AVANTIPLUS® WF SERIES

CAPACITY				2.0kW	2.5kW	3.5kW	5.0kW	6.0kW
Indoor				SRK20ZSXA-WF	SRK25ZSXA-WF	SRK35ZSXA-WF	SRK50ZSXA-WF	SRK60ZSXA-WF
Outdoor				SRC20ZSXA-W	SRC25ZSXA-W	SRC35ZSXA-W	SRC50ZSXA-W	SRC60ZSXA-W
Power Source (Outdoor Unit)				1 Phase 240V 50Hz				
*Operation Data	Nominal Capacity (Range)	Cooling T1	kW	2.0 (0.9~3.4)	2.5 (0.9~3.8)	3.5 (0.9~4.5)	5.0 (1.0~6.2)	6.1 (1.0~6.9)
		Heating H1		2.7 (0.8-5.5)	3.2 (0.8-6.0)	4.3 (0.8~6.8)	6.0 (0.8~8.2)	6.8 (0.8~8.8)
		Heating H2		3.7	4.2	4.7	6.0	6.8
	Power Consumption	Cooling T1		0.31 (0.16~0.76)	0.44 (0.16~0.91)	0.74 (0.16~1.27)	1.24 (0.19~1.90)	1.71 (0.19~2.50)
		Heating H1		0.47 (0.14~1.36)	0.59 (0.14~1.54)	0.90 (0.14~1.87)	1.36 (0.20~2.46)	1.65 (0.20~2.86)
	Maximum Power Consumption			1.92	1.92	1.92	2.9	2.9
	Running Current	Cooling T1	A	1.7	2.3	3.4	5.2	7.2
		Heating H1		2.4	2.9	4.1	5.7	6.9
	Inrush Current, Maximum Current			2.5, 9.0	3.0, 9.0	4.3, 9.0	5.0. 15.0	5.0, 15.0
	EER	Cooling T1		6.45	5.68	4.73	4.03	3.57
	COP	Heating H1		5.74	5.42	4.78	4.41	4.12
	Sound Power Level (JIS C9612)	Outdoor	dB(A)	56	57	61	63	65
	Sound Pressure Level (JIS C9612)	Indoor		38-31-24-19	39-33-25-19	43-35-26-19	44-39-31-22	48-41-33-22
		Outdoor		43	44	48	51	52
Energy Label (GEMS 2019)	Hot	Cooling	Stars	★★★★★½ (5.5)	★★★★★ (5)	★★★★★ (5)	★★★★ (4)	★★★½ (3.5)
		Heating		★★★★½ (4.5)	★★★★½ (4.5)	★★★★ (4)	★★★½ (3.5)	★★★½ (3.5)
	Average	Cooling		★★★★½ (4.5)	★★★★½ (4.5)	★★★★ (4)	★★★½ (3.5)	★★★ (3)
		Heating		★★★★ (4)	★★★★ (4)	★★★½ (3.5)	★★★ (3)	★★★ (3)
	Cold	Cooling		★★★★½ (4.5)	★★★★½ (4.5)	★★★★½ (4.5)	★★★½ (3.5)	★★★½ (3.5)
		Heating		★★★½ (3.5)	★★★½ (3.5)	★★★ (3)	★★½ (2.5)	★★½ (2.5)
External dimensions (HXWXD)		Indoor	mm	305x920x220	305x920x220	305X920X220	305X920X220	305X920X220
		Outdoor		640x800(+71)x290	640x800(+71)x290	640X800(+71)X290	640X800(+71)X290	640X800(+71)X290
Net weight		Indoor	kg	13	13	13	13	13
		Outdoor		43	43	43	45	45
Airflow		Cooling (Indoor)	l/s	188-152-100-83	203-167-112-83	218-180-122-83	238-207-130-90	272-223-148-90
		Heating (Indoor)		203-172-120-90	213-183-130-90	232-197-143-90	288-238-163-103	297-228-182-103
Installation Data	Refrigerant (Type, Amount, Pre-charge Length)	Quantity	kg	(R32) 1.2	(R32) 1.2	(R32) 1.2	(R32) 1.3	(R32) 1.3
		Pre-Charged to Pipe	m	15	15	15	15	15
	Refrigerant Piping	Liquid line	mm	Ø6.35	Ø6.35	Ø6.35	Ø6.35	Ø6.35
		Gas line		Ø9.52	Ø9.52	Ø9.52	Ø12.7	Ø12.7
	Connection Method			Flare connection				
	Maximum Pipe Length (One Way)		m	25			30	
	Max Vertical Height Diff. Between O.U. and I.U.			15 (O.U. above I.U.) / 15 (O.U. below I.U.)			20 (O.U. above I.U.) / 20 (O.U. below I.U.)	
Standard accessories				Allergen Clear & Photocatalytic Washable Deodorizing Filter. Built-in Wi-Fi.				
Optional parts				Interface kit (SC-BIKN2-E)				
Demand Response (AS4755)				Yes	Yes	Yes	Yes	Yes

* Operation data has been gathered in accordance with AS/NZS 3823 standards. For testing conditions please refer to Page 23.

PRODUCT SPECIFICATIONS

AVANTI® SERIES

CAPACITY				2.0kW	2.5kW	2.5kW (Cool Only)	3.5kW	3.5kW (Cool Only)	5.0kW	5.0kW (Cool Only)
Indoor				SRK20ZSA-W / DXK06ZSA-W	SRK25ZSA-W / DXK09ZSA-W	SRK10YSA-W	SRK35ZSA-W / DXK12ZSA-W	SRK13YSA-W	SRK50ZSA-W / DXK18ZSA-W	SRK18YSA-W
Outdoor				SRC20ZSA-W / DXC06ZSA-W	SRC25ZSA-W / DXC09ZSA-W	SRC10YSA-W	SRC35ZSA-W / DXC12ZSA-W	SRC13YSA-W	SRC50ZSA-W / DXC18ZSA-W	SRC18YSA-W
Power Source (Outdoor Unit)				1 Phase 240V 50Hz						
*Operation Data	Nominal Capacity (Range)	Cooling T1	kW	2.0 (0.9~3.0)	2.5 (0.9~3.5)	2.5 (0.9~3.5)	3.5 (0.9~4.4)	3.5 (0.9~4.4)	5.0 (1.2~5.5)	5.0 (1.2~5.5)
		Heating H1		2.7 (1.0 ~4.2)	3.2 (0.9~5.2)	N/A	3.7 (0.9~5.4)	N/A	5.8 (1.2~6.6)	N/A
		Heating H2		3.2	3.95	N/A	4.0	N/A	5.2	N/A
	Power Consumption	Cooling T1		0.41 (0.18~0.81)	0.51 (0.18~0.88)	0.51 (0.18~0.88)	0.82 (0.18~1.27)	0.82 (0.18~1.27)	1.39 (0.27-1.86)	1.39 (0.27~1.86)
		Heating H1		0.56 (0.20~1.12)	0.65 (0.21~1.43)	N/A	0.81 (0.21~1.44)	N/A	1.49 (0.26~1.97)	N/A
	Maximum Power Consumption			1.65	1.65	1.65	1.65	1.65	2.68	2.68
	Running Current	Cooling T1	A	2.1	2.5	2.5	3.7	3.7	5.9	5.9
		Heating H1		2.7	3.0	N/A	3.7	N/A	6.3	N/A
	Inrush Current, Maximum Current			2.8, 9.0	3.2, 9.0	2.6, 9.0	3.9, 9.0	3.9, 9.0	5.0, 14.5	5.0, 14.5
	EER	Cooling T1		4.88	4.90	4.90	4.27	4.27	3.60	3.60
	COP	Heating H1		4.82	4.92	N/A	4.57	N/A	3.89	N/A
	Sound Power Level (JIS C9612)	Outdoor	dB(A)	56	58	58	62	62	61	61
	Sound Pressure Level (JIS C9612)	Indoor		35-27-22-19	40-31-22-19	39-31-22-19	43-34-27-19	43-34-27-19	43-36-28-22	43-36-28-22
		Outdoor		44	45	45	50	49	49	47
Energy Label (GEMS 2019)	Hot	Cooling	Stars	★★★★½ (4.5)	★★★★½ (4.5)	★★★★½ (4.5)	★★★★ (4)	★★★★ (4)	★★★½ (3.5)	★★★½ (3.5)
		Heating		★★★½ (3.5)	★★★½ (3.5)	N/A	★★★½ (3.5)	N/A	★★★½ (3.5)	N/A
	Average	Cooling		★★★★ (4)	★★★½ (3.5)	★★★½ (3.5)	★★★½ (3.5)	★★★½ (3.5)	★★★ (3)	★★★ (3)
		Heating		★★★½ (3.5)	★★★ (3)	N/A	★★★ (3)	N/A	★★½ (2.5)	N/A
	Cold	Cooling		★★★★ (4)	★★★½ (3.5)	★★★½ (3.5)	★★★½ (3.5)	★★★½ (3.5)	★★★ (3)	★★★ (3)
		Heating		★★★ (3)	★★★ (3)	N/A	★★½ (2.5)	N/A	★★ (2)	N/A
External dimensions (HXWXD)		Indoor	mm	290x870x230	290x870x230	290x870x230	290x870x230	290x870x230	290x870x230	290x870x230
		Outdoor		540x780(+62)x290	540x780(+62)x290	540x780(+62)x290	540x780(+62)x290	540x780(+62)x290	640x800(+71)x290	640x800(+71)x290
Net weight		Indoor	kg	9.5	10	10	10	10	10	10
		Outdoor		33	36	33.5	36	33.5	43.5	40
Airflow		Cooling (Indoor)	l/s	165-127-93-83	182-140-88-78	182-140-88-78	205-152-117-78	205-152-117-78	213-175-113-93	213-175-113-93
		Heating (Indoor)		190-142-108-93	237-182-110-88	N/A	250-193-117-88	N/A	253-198-152-113	N/A
Installation Data	Refrigerant (Type, Amount, Pre-charge Length)	Quantity	kg	(R32) 0.58	(R32) 0.78	(R32) 0.75	(R32) 0.78	(R32) 0.75	(R32) 1.05	(R32) 1.05
		Pre-Charged to Pipe	m	15	15	15	15	15	15	15
	Refrigerant Piping	Liquid line	mm	Ø6.35	Ø6.35	Ø6.35	Ø6.35	Ø6.35	Ø6.35	Ø6.35
		Gas line		Ø9.52	Ø9.52	Ø9.52	Ø9.52	Ø9.52	Ø12.7	Ø12.7
	Connection Method			Flare connection						
	Maximum Pipe Length (One Way)		m	20					25	
	Max Vertical Height Diff. Between O.U. and I.U.			10 (O.U. above I.U.) / 10 (O.U. below I.U.)					15 (O.U. above I.U.) / 15 (O.U. below I.U.)	
Standard accessories				Allergen Clear & Photocatalytic Washable Deodorizing Filter		Enzyme Filter & Photocatalytic Washable Deodorizing Filter	Allergen Clear & Photocatalytic Washable Deodorizing Filter	Enzyme Filter & Photocatalytic Washable Deodorizing Filter	Allergen Clear & Photocatalytic Washable Deodorizing Filter	Enzyme Filter & Photocatalytic Washable Deodorizing Filter
Optional parts				Interface kit (SC-BIKN2-E) / Wi-Fi Kit						
Demand Response (AS4755)				Yes	Yes	Yes	Yes	Yes	Yes	Yes

* Operation data has been gathered in accordance with AS/NZS 3823 standards. For testing conditions please refer to Page 27.

PRODUCT SPECIFICATIONS

AVANTI® WF1 SERIES

CAPACITY				2.0kW	2.5kW	3.5kW	5.0kW
Indoor				DXK06ZSA-WF1	DXK09ZSA-W F1	DXK12ZSA-WF1	DXK18ZSA-WF1
Outdoor				DXC06ZSA-W	DXC09ZSA-W	DXC12ZSA-W	DXC18ZSA-W
Power Source (Outdoor Unit)				1 Phase 220 - 240V 50Hz			
*Operation Data	Nominal Capacity (Range)	Cooling T1	kW	2.0 (0.9~3.0)	2.5 (0.9~3.5)	3.5 (0.9~4.4)	5.0 (1.2~5.5)
		Heating H1		2.7 (1.0 ~4.2)	3.2 (0.9~5.2)	3.7 (0.9~5.4)	5.8 (1.2~6.6)
		Heating H2		3.2	3.95	4.0	5.2
	Power Consumption	Cooling T1		0.41 (0.18~0.81)	0.51 (0.18~0.88)	0.82 (0.18~1.27)	1.39 (0.27-1.86)
		Heating H1		0.56 (0.20~1.12)	0.65 (0.21~1.43)	0.81 (0.21~1.44)	1.49 (0.26~1.97)
	Maximum Power Consumption			1.65	1.65	1.65	2.68
	Running Current	Cooling T1	A	2.1	2.5	3.7	5.9
		Heating H1		2.7	3.0	3.7	6.3
	Inrush Current, Maximum Current			2.8, 9.0	3.2, 9.0	3.9, 9.0	5.0, 14.5
	EER	Cooling T1		4.88	4.90	4.27	3.60
	COP	Heating H1		4.82	4.92	4.57	3.89
	Sound Power Level (JIS C9612)	Outdoor	dB(A)	56	58	62	61
	Sound Pressure Level (JIS C9612)	Indoor		35-27-22-19	40-31-22-19	43-34-27-19	43-36-28-22
		Outdoor		44	45	50	49
Energy Label (GEMS 2019)	Hot	Cooling	Stars	★★★★★ (5)	★★★★★ (5)	★★★★½ (4.5)	★★★½ (3.5)
		Heating		★★★½ (3.5)	★★★½ (3.5)	★★★½ (3.5)	★★★½ (3.5)
	Average	Cooling		★★★★ (4)	★★★★ (4)	★★★★ (4)	★★★ (3)
		Heating		★★★½ (3.5)	★★★ (3)	★★★ (3)	★★½ (2.5)
	Cold	Cooling		★★★★ (4)	★★★★ (4)	★★★★ (4)	★★★½ (3.5)
		Heating		★★★ (3)	★★★ (3)	★★½ (2.5)	★★ (2)
External dimensions (HXWXD)		Indoor	mm	290x870x230	290x870x230	290x870x230	290x870x230
		Outdoor		540x780(+62)x290	540x780(+62)x290	540x780(+62)x290	640x800(+71)x290
Net weight		Indoor	kg	9.5	10	10	10
		Outdoor		33	36	36	43.5
Airflow		Cooling (Indoor)	l/s	165-127-93-83	182-140-88-78	205-152-117-78	213-175-113-93
		Heating (Indoor)		190-142-108-93	237-182-110-88	250-193-117-88	253-198-152-113
Installation Data	Refrigerant (Type, Amount, Pre-charge Length)	Quantity	kg	(R32) 0.58	(R32) 0.78	(R32) 0.78	(R32) 1.05
		Pre-Charged to Pipe	m	15	15	15	15
	Refrigerant Piping	Liquid line	mm	Ø6.35	Ø6.35	Ø6.35	Ø6.35
		Gas line		Ø9.52	Ø9.52	Ø9.52	Ø12.7
	Connection Method			Flare connection			
	Maximum Pipe Length (One Way)		m	20			25
	Max Vertical Height Diff. Between O.U. and I.U.			10 (O.U. above I.U.) / 10 (O.U. below I.U.)			15 (O.U. above I.U.) / 15 (O.U. below I.U.)
Standard accessories				Allergen Clear Filter & NOVAShield® PM 2.5 Filter. Built-in Wi-Fi		Allergen Clear Filter & NOVAShield® PM 2.5 Filter. Built-in Wi-Fi	Allergen Clear Filter & NOVAShield® PM 2.5 Filter. Built-in Wi-Fi
Optional parts				Interface kit (SC-BIKN2-E)			
Demand Response (AS4755)				Yes	Yes	Yes	Yes

* Operation data has been gathered in accordance with AS/NZS 3823 standards. For testing conditions please refer to Page 27.

PRODUCT SPECIFICATIONS

BRONTE® SERIES

CAPACITY				6.3kW	7.1kW	7.1kW (Cool Only)	8.0kW	9.5kW	10.0kW	10.0kW
Indoor				SRK63ZRA-W / DXK21ZRA-W	SRK71ZRA-W / DXK24ZRA-W	SRK24YRA-W	SRK80ZRA-W / DXK28ZRA-W	SRK95ZRA-W / DXK33ZRA-W	SRK100ZR-W	SRK100ZR-W
Outdoor				SRC63ZRA-W / DXC21ZRA-W	SRC71ZRA-W / DXC24ZRA-W	SRC24YRA-W	SRC80ZRA-W / DXC28ZRA-W	SRC95ZRA-W / DXC33ZRA-W	FDCA100VNA-W	FDCA100VSA-W
Power Source (Outdoor Unit)				1 Phase 240V 50Hz						3 Phase 380-415V 50Hz
*Operation Data	Nominal Capacity (Range)	Cooling T1	kW	6.3 (1.2~7.4)	7.1 (2.3~8.3)	7.1 (2.3~8.3)	8.0 (2.3~9.5)	9.5 (2.5~10.6)	10.0 (4.0~11.2)	10.0 (4.0~11.2)
		Heating H1		7.1 (0.8 ~9.2)	8.0 (2.0~10.9)	N/A	9.0 (2.1~11.2)	10.3 (3.2 ~11.9)	11.2 (4.0 ~12.5)	11.2 (4.0 ~12.5)
		Heating H2		7.0	8.1	N/A	8.2	9.6	7.7	7.7
	Power Consumption	Cooling T1		1.58 (0.2~2.5)	1.84 (0.48~2.4)	1.84 (0.48~2.4)	2.22 (0.48~3.1)	2.56 (0.5-3.2)	3.19	3.19
		Heating H1		1.60 (0.16~2.8)	2.02 (0.4~3.4)	N/A	2.40 (0.40~3.40)	2.64 (0.6-3.7)	3.04	3.04
	Maximum Power Consumption			2.90	3.65	3.65	3.65	3.80	6.4	10.20
	Running Current	Cooling T1	A	6.7	7.8	7.8	9.4	10.8	14.3	4.8
		Heating H1		6.7	8.6	N/A	10.2	11.1	13.6	4.6
	Inrush Current, Maximum Current			6.7, 14.5	8.6, 17.0	7.8, 17.0	10.2, 17.0	11.1, 17.5	5, 24	5, 15
	EER	Cooling T1		3.99	3.86	3.86	3.60	3.71	3.13	3.13
	COP	Heating H1		4.44	3.96	N/A	3.75	3.90	3.68	3.68
	Sound Power Level (JIS C9612)	Outdoor	dB(A)	64	65	65	68	69	69	69
	Sound Pressure Level (JIS C9612)	Indoor		44-39-35-25	43-40-36-24	43-40-36-24	46-43-38-25	48-45-40-26	48-45-40-27	48-45-40-27
		Outdoor		54	53	53	56	57	54	54
Energy Label (GEMS 2019)	Hot	Cooling	Stars	★★★★ (4)	★★★½ (3.5)	★★★½ (3.5)	★★★½ (3.5)	★★★½ (3.5)	★★★ (3)	★★★ (3)
		Heating		★★★½ (3.5)	★★★ (3)	N/A	★★★ (3)	★★★½ (3.5)	★★½ (2.5)	★★½ (2.5)
	Average	Cooling		★★★½ (3.5)	★★★½ (3.5)	★★★½ (3.5)	★★★ (3)	★★★ (3)	★★½ (2.5)	★★½ (2.5)
		Heating		★★★ (3)	★★½ (2.5)	N/A	★★½ (2.5)	★★½ (2.5)	★½ (1.5)	★½ (1.5)
	Cold	Cooling		★★★½ (3.5)	★★★½ (3.5)	★★★½ (3.5)	★★★½ (3.5)	★★★½ (3.5)	★★★ (3)	★★★ (3)
		Heating		★★½ (2.5)	★★ (2)	N/A	★★ (2)	★★ (2)	★ (1)	★ (1)
External dimensions (HXWXD)		Indoor	mm	339x1197x262	339x1197x262	339x1197x262	339x1197x262	339x1197x262	339x1197x262	339x1197x262
		Outdoor		640x800(+71)x290	750x880(+88)x340	750x880(+88)x340	750x880(+88)x340	845x970(+89)x370	845x970x370	845x970x370
Net weight		Indoor	kg	15.5	15.5	15.5	15.5	16.5	16.5	16.5
		Outdoor		45	58	58	58	70.5	77	78
Airflow		Cooling (Indoor)	l/s	342-301-262-173	342-310-270-174	342-310-270-174	383-345-300-182	408-355-293-173	408-355-293-173	408-355-293-173
		Heating (Indoor)		392-317-275-218	425-330-288-222	N/A	450-363-315-234	458-386-318-227	458-386-318-227	458-386-318-227
Installation Data	Refrigerant (Type, Amount, Pre-charge Length)	Quantity	kg	(R32) 1.25	(R32) 1.6	(R32) 1.6	(R32) 1.6	(R32) 2.0	(R32) 3.3	(R32) 3.3
		Pre-Charged to Pipe	m	15	15	15	15	15	30	30
	Refrigerant Piping	Liquid line	mm	Ø6.35	Ø6.35	Ø6.35	Ø6.35	Ø9.52	Ø9.52	Ø9.52
		Gas line		Ø12.70	Ø15.88	Ø15.88	Ø15.88	Ø15.88	Ø15.88	Ø15.88
	Connection Method			Flare connection						
	Maximum Pipe Length (One Way)		m	30					50	
	Max Vertical Height Diff. Between O.U. and I.U.			20 (O.U. above I.U.) / 20 (O.U. below I.U.)					50 (O.U above I.U) / 15 (O.U below I.U)	
Standard accessories				Allergen Clear & Photocatalytic Washable Deodorizing Filter		Enzyme filter & Photocatalytic Washable Deodorizing Filter	Allergen Clear & Photocatalytic Washable Deodorizing Filter			
Optional parts				Interface kit (SC-BIKN2-E) / Wi-Fi Kit						
Demand Response (AS4755)				Yes	Yes	Yes	Yes	Yes	Yes	Yes

* Operation data has been gathered in accordance with AS/NZS 3823 standards. For testing conditions please refer to Page 27.

PRODUCT SPECIFICATIONS

BRONTE® WF1 SERIES

CAPACITY				6.3kW	7.1kW	8.0kW	9.5kW	10.0kW	10.0kW
Indoor				DXK21ZRA-WF1	DXK24ZRA-WF1	DXK28ZRA-WF1	DXK33ZRA-WF1	SRK100ZR-WF	SRK100ZR-WF
Outdoor				DXC21ZRA-W	DXC24ZRA-W	DXC28ZRA-W	DXC33ZRA-W	FDCA100VNA-W	FDCA100VSA-W
Power Source (Outdoor Unit)				1 Phase 240V 50Hz					3 Phase 380-415V 50Hz
*Operation Data	Nominal Capacity (Range)	Cooling T1	kW	6.3 (1.2~7.4)	7.1 (2.3~8.3)	8.0 (2.3~9.5)	9.5 (2.5~10.6)	10.0 (4.0~11.2)	10.0 (4.0~11.2)
		Heating H1		7.1 (0.8 ~9.2)	8.0 (2.0~10.9)	9.0 (2.1~11.2)	10.3 (3.2 ~11.9)	11.2 (4.0 ~12.5)	11.2 (4.0 ~12.5)
		Heating H2		7.0	8.1	8.2	9.6	7.7	7.7
	Power Consumption	Cooling T1		1.58 (0.2~2.5)	1.84 (0.48~2.4)	2.22 (0.48~3.1)	2.56 (0.5-3.2)	3.19	3.19
		Heating H1		1.60 (0.16~2.8)	2.02 (0.4~3.4)	2.40 (0.40~3.40)	2.64 (0.6-3.7)	3.04	3.04
	Maximum Power Consumption			2.90	3.65	3.65	3.80	6.4	10.20
	Running Current	Cooling T1	A	6.7	7.8	9.4	10.8	14.3	4.8
		Heating H1		6.7	8.6	10.2	11.1	13.6	4.6
	Inrush Current, Maximum Current			6.7, 14.5	8.6, 17.0	10.2, 17.0	11.1, 17.5	5, 24	5, 15
	EER	Cooling T1		3.99	3.86	3.60	3.71	3.13	3.13
	COP	Heating H1		4.44	3.96	3.75	3.90	3.68	3.68
	Sound Power Level (JIS C9612)	Outdoor	dB(A)	64	65	68	69	69	69
	Sound Pressure Level (JIS C9612)	Indoor		44-39-35-25	43-40-36-24	46-43-38-25	48-45-40-26	48-45-40-27	48-45-40-27
		Outdoor		54	53	56	57	54	54
Energy Label (GEMS 2019)	Hot	Cooling	Stars	★★★★ (4)	★★★★ (4)	★★★½ (3.5)	★★★½ (3.5)	★★★ (3)	★★★ (3)
		Heating		★★★½ (3.5)	★★★ (3)	★★★ (3)	★★★½ (3.5)	★★½ (2.5)	★★½ (2.5)
	Average	Cooling		★★★½ (3.5)	★★★½ (3.5)	★★★½ (3.5)	★★★½ (3.5)	★★½ (2.5)	★★½ (2.5)
		Heating		★★★ (3)	★★½ (2.5)	★★½ (2.5)	★★½ (2.5)	★½ (1.5)	★½ (1.5)
	Cold	Cooling		★★★★ (4)	★★★½ (3.5)	★★★½ (3.5)	★★★½ (3.5)	★★★ (3)	★★★ (3)
		Heating		★★½ (2.5)	★★ (2)	★★ (2)	★★ (2)	★ (1)	★ (1)
External dimensions (HXWXD)		Indoor	mm	339x1197x262	339x1197x262	339x1197x262	339x1197x262	339x1197x262	339x1197x262
		Outdoor		640x800(+71)x290	750x880(+88)x340	750x880(+88)x340	845x970(+89)x370	845x970x370	845x970x370
Net weight		Indoor	kg	15.5	15.5	15.5	16.5	16.5	16.5
		Outdoor		45	58	58	69	77	78
Airflow		Cooling (Indoor)	l/s	342-301-262-173	342-310-270-174	383-345-300-182	408-355-293-173	408-355-293-173	408-355-293-173
		Heating (Indoor)		392-317-275-218	425-330-288-222	450-363-315-234	458-386-318-227	458-386-318-227	458-386-318-227
Installation Data	Refrigerant (Type, Amount, Pre-charge Length)	Quantity	kg	(R32) 1.25	(R32) 1.6	(R32) 1.6	(R32) 2.0	(R32) 3.3	(R32) 3.3
		Pre-Charged to Pipe	m	15	15	15	15	30	30
	Refrigerant Piping	Liquid line	mm	Ø6.35	Ø6.35	Ø6.35	Ø9.52	Ø9.52	Ø9.52
		Gas line		Ø12.70	Ø15.88	Ø15.88	Ø15.88	Ø15.88	Ø15.88
	Connection Method			Flare connection					
	Maximum Pipe Length (One Way)		m	30				50	
	Max Vertical Height Diff. Between O.U. and I.U.			20 (O.U. above I.U.) / 20 (O.U. below I.U.)				50 (O.U above I.U) / 15 (O.U below I.U)	
Standard accessories				Allergen Clear Filter & NOVAShield® PM 2.5 Filter, Built-in Wi-Fi		Allergen Clear Filter & NOVAShield® PM 2.5 Filter, Built-in Wi-Fi		Allergen Clear & Photocatalytic Washable Deodorizing Filter. Built-in Wi-Fi	
Optional parts				Interface kit (SC-BIKN2-E)					
Demand Response (AS4755)				Yes	Yes	Yes	Yes	Yes	Yes

* Operation data has been gathered in accordance with AS/NZS 3823 standards. For testing conditions please refer to Page 27.

PRODUCT SPECIFICATIONS

CIARA™ SERIES

CAPACITY				1.5kW	2.0kW	2.5kW	3.3kW	5.0kW	6.3kW	7.1kW
Indoor				DXK05ZTLA-WF	DXK07ZTLA-WF	DXK09ZTLA-WF	DXK12ZTLA-WF	DXK18ZTLA-WF	DXK21ZTLA-WF	DXK24ZTLA-WF
Outdoor				DXC05ZTLA-W	DXC07ZTLA-W	DXC09ZTLA-W	DXC12ZTLA-W	DXC18ZTLA-W	DXC21ZTLA-W	DXC24ZTLA-W
Power Source (Outdoor Unit)				1 Phase, 220 - 240V, 50Hz						
*Operation Data	Nominal Capacity (Range)	Cooling T1	kW	1.5 (0.7~2.5)	2.0 (0.7~2.8)	2.5 (0.8~3.2)	3.3 (0.8~3.7)	5.0 (1.3~5.3)	6.3 (1.2~7.1)	7.1 (1.2~7.3)
		Heating H1		2.0 (0.9 ~4.1)	2.7 (0.9 ~4.2)	3.0 (1.0~4.8)	3.8 (1.0~4.9)	5.8 (1.3~6.3)	7.1 (1.0~8.5)	8.0 (1.1~9.4)
		Heating H2		3.10	3.2	3.8	3.9	4.6	6.6	7.42
	Power Consumption	Cooling T1		0.35 (0.20~0.85)	0.51 (0.20~0.92)	0.58 (0.19~0.95)	0.90 (0.19~1.30)	1.59 (0.29-1.77)	1.84 (0.27-2.39)	2.27 (0.28 - 2.67)
		Heating H1		0.42 (0.21~1.39)	0.64 (0.21~1.40)	0.66 (0.21~1.48)	0.90 (0.21~1.50)	1.62 (0.27~2.04)	2.01 (0.25~2.89)	2.30 (0.26 - 3.42)
	Maximum Power Consumption			1.55	1.55	1.65	1.65	2.25	3.18	3.76
	Running Current	Cooling T1	A	1.90	2.7	3.1	4.1	6.7	7.7	9.6
		Heating H1		2.30	3.4	3.5	4.1	6.8	8.5	9.7
	Inrush Current, Maximum Current			2.4, 9.0	3.5, 9.0	3.6, 9.0	4.9, 9.0	5.0, 14.5	5.0, 17	5.0, 17
	EER	Cooling T1		4.29	3.92	4.31	3.67	3.14	3.42	3.13
	COP	Heating H1		4.76	4.22	4.55	4.22	3.58	3.53	3.48
	Sound Power Level (JIS C9612)	Outdoor	dB(A)	56	57	58	61	64	64	67
	Sound Pressure Level (JIS C9612)	Indoor		36-30-23-19	37-31-23-19	41-36-26-22	45-37-27-22	47-40-32-25	46-43-38-30	49-44-39-31
		Outdoor		43	45	47	50	52	52	55
Energy Label (GEMS 2019)	Hot	Cooling	Stars	★★½ (2.5)	★★★½ (3.5)	★★★★ (4.0)	★★★½ (3.5)	★★★ (3.0)	★★★½ (3.5)	★★★½ (3.5)
		Heating		★★★½ (3.5)	★★★½ (3.5)	★★★½ (3.5)	★★★½ (3.5)	★★★ (3.0)	★★★ (3.0)	★★★ (3.0)
	Average	Cooling		★½ (1.5)	★★½ (2.5)	★★★ (3.0)	★★★ (3.0)	★★★ (3.0)	★★★½ (3.5)	★★★ (3.0)
		Heating		★★★ (3.0)	★★★ (3.0)	★★★ (3.0)	★★★ (3.0)	★★½ (2.5)	★★½ (2.5)	★★½ (2.5)
	Cold	Cooling		★½ (1.5)	★★½ (2.5)	★★★ (3.0)	★★★ (3.0)	★★★ (3.0)	★★★½ (3.5)	★★★½ (3.5)
		Heating		★★★ (3.0)	★★½ (2.5)	★★½ (2.5)	★★½ (2.5)	★★ (2.0)	★★ (2.0)	★★ (2.0)
External dimensions (HXWXD)		Indoor	mm	294x798x210	294x798x210	294x798x210	294x798x210	294x798x210	294x998x230	294x998x230
		Outdoor		540x645(+57)x275	540x645(+57)x275	540x645(+57)x275	540x645(+57)x275	595x780(+62)x290	640x800(+71)x290	640x800(+71)x290
Net weight		Indoor	kg	8.5	8.5	9.0	9.0	9.5	12	12
		Outdoor		22	22	24	24	33	42.5	42.5
Airflow		Cooling (Indoor)	l/s	158-125-82-63	165-130-82-63	167-133-88-73	187-142-90-73	208-173-120-90	283-245-202-157	320-253-210-157
		Heating (Indoor)		167-145-97-73	173-152-103-73	183-157-108-83	197-163-113-83	210-192-148-107	307-287-235-193	345-295-243-193
Installation Data	Refrigerant (Type, Amount, Pre-charge Length)	Quantity	kg	(R32) 0.43	(R32) 0.43	(R32) 0.59	(R32) 0.59	(R32) 0.9	(R32) 1.20	(R32) 1.20
		Pre-Charged to Pipe	m	10	10	10	10	15	15	15
	Refrigerant Piping	Liquid line	mm	Ø6.35	Ø6.35	Ø6.35	Ø6.35	Ø6.35	Ø6.35	Ø6.35
		Gas line		Ø9.52	Ø9.52	Ø9.52	Ø9.52	Ø12.7	Ø12.7	Ø12.7
	Connection Method			Flare connection						
	Maximum Pipe Length (One Way)		m	20	20	20	20	25	30	30
	Max Vertical Height Diff. Between O.U. and I.U.			15 (O.U. above I.U.) / 15 (O.U. below I.U.)				20 (O.U. above I.U.) / 20 (O.U. below I.U.)		
Standard accessories				Allergen Clear Filter x 1, Wi-Fi						
Optional parts				Interface kit (SC-BIKN2-E) / Photocatalytic Washable Deodorizing Filter						
Demand Response (AS4755)				No	No	No	No	Yes	Yes	Yes

* Operation data has been gathered in accordance with AS/NZS 3823 standards. For testing conditions please refer to Page 27.

PRODUCT SPECIFICATIONS

WERA® SERIES

CAPACITY				2.5kW	3.5kW	5.0kW
Indoor				SRF25ZS-W	SRF35ZS-W	SRF50ZSX-W
Outdoor				SRC25ZSA-W	SRC35ZSA-W	SRC50ZSXA-W
Power Source (Outdoor Unit)				1 Phase 240V 50Hz		
*Operation Data	Nominal Capacity (Range)	Cooling T1	kW	2.5 (0.9-3.2)	3.5 (0.9-4.1)	5.0 (1.1-5.6)
		Heating H1		3.4 (0.9-4.7)	4.5 (0.8-5.2)	6.0 (0.8-7.4)
		Heating H2		3.45	3.80	5.60
	Power Consumption	Cooling T1		0.50 (0.17-0.82)	0.82 (0.18-1.33)	1.32 (0.19-1.90)
		Heating H1		0.74 (0.19-1.29)	1.12 (0.19-1.53)	1.58 (0.19-2.34)
	Maximum Power Consumption			1.65	1.65	2.90
	Running Current	Cooling T1	A	2.5	3.7	5.6
		Heating H1		3.4	4.9	6.6
	Inrush Current, Maximum Current			3.6, 9.0	5.0, 9,0	5.0, 15.0
	EER	Cooling T1		5.00	4.27	3.79
	COP	Heating H1		4.59	4.02	3.80
	Sound Power Level (JIS C9612)	Outdoor	dB(A)	60	63	63
	Sound Pressure Level (JIS C9612)	Indoor		37-32-29-26	40-35-33-29	46-38-33-28
		Outdoor		46	50	51
Energy Label (GEMS 2019)	Hot	Cooling	Stars	★★★★ (4)	★★★★ (4)	★★★½ (3.5)
		Heating		★★★½ (3.5)	★★★ (3)	★★★ (3)
	Average	Cooling		★★★½ (3.5)	★★★½ (3.5)	★★★ (3)
		Heating		★★★(3)	★★★½ (2.5)	★★½ (2.5)
	Cold	Cooling		★★★½ (3.5)	★★★½ (3.5)	★★★ (3)
		Heating		★★½ (2.5)	★★ (2)	★★ (2)
External dimensions (HXWXD)		Indoor	mm	600x860x238	600x860x238	600x860x238
		Outdoor		540x780(+62)x290	540x780(+62)x290	640x800(+71)x290
Net weight		Indoor	kg	18	19	19
		Outdoor		34.5	34.5	45
Airflow		Cooling (Indoor)	l/s	150-126-111-96	153-130-121-106	192-160-123-110
		Heating (Indoor)		175-136-128-110	178-138-135-123	200-167-157-127
Installation Data	Refrigerant (Type, Amount, Pre-charge Length)	Quantity	kg	(R32) 0.78	(R32) 0.78	(R32) 1.30
		Pre-Charged to Pipe	m	15	15	15
	Refrigerant Piping	Liquid line	mm	Ø6.35	Ø6.35	Ø6.35
		Gas line		Ø9.52	Ø9.52	Ø12.7
	Connection Method			Flare connection		
	Maximum Pipe Length (One Way)		m	20		30
	Max Vertical Height Diff. Between O.U. and I.U.			10 (O.U. above I.U.) / 10 (O.U. below I.U.)		20 (O.U. above I.U.) / 20 (O.U. below I.U.)
Standard accessories				Allergen Clear & Photocatalytic Washable Deodorizing Filter		
Optional parts				Interface kit (SC-BIKN2-E) / Wi-Fi Kit		
Demand Response (AS4755)				Yes	Yes	Yes

* Operation data has been gathered in accordance with AS/NZS 3823 standards. For testing conditions please refer to Page 27.

PRODUCT SPECIFICATIONS

AKARI® SERIES

CAPACITY				2.5kW	3.5kW	5.0kW	5.6kW
Indoor				SRR25ZS-W	SRR35ZS-W	SRR50ZS-W	SRR60ZS-W
Outdoor				SRC25ZSA-W	SRC35ZSA-W	SRC50ZSXA-W	SRC60ZSXA-W
Power Source (Outdoor Unit)				1 Phase 240V 50Hz			
*Operation Data	Nominal Capacity (Range)	Cooling T1	kW	2.5 (0.9-3.4)	3.5 (0.9-4.1)	5.0 (1.2-6.0)	5.6 (1.2-6.5)
		Heating H1		3.4 (0.9-5.0)	4.2 (1.0-5.2)	5.4 (1.0-8.2)	6.7 (1.0 -8.6)
		Heating H2		3.55	4.1	6.0	6.8
	Power Consumption	Cooling T1		0.56 (0.20-0.90)	0.93 (0.19-1.26)	1.42 (0.22-2.02)	1.70 (0.22-2.57)
		Heating H1		0.75 (0.20-1.42)	1.01 (0.20-1.45)	1.39 (0.2-2.86)	1.89 (0.2-2.89)
	Maximum Power Consumption			1.65	1.65	2.9	2.9
	Running Current	Cooling T1	A	2.7	4.2	6	7.2
		Heating H1		3.5	4.5	5.9	8
	Inrush Current, Maximum Current			3.5, 9.0	4.5, 9.0	5.0, 15.0	5.0, 15.0
	EER	Cooling T1		4.46	3.76	3.52	3.29
	COP	Heating H1		4.53	4.16	3.88	3.54
	Sound Power Level (JIS C9612)	Outdoor	dB(A)	59	62	63	65
	Sound Pressure Level (JIS C9612)	Indoor		37-33-30-24	38-34-31-25	41-37-34-29	44-38-35-30
		Outdoor		47	50	51	52
Energy Label (GEMS 2019)	Hot	Cooling	Stars	★★★½ (3.5)	★★★½ (3.5)	★★★ (3)	★★★ (3)
		Heating		★★★½ (3.5)	★★★ (3)	★★★½ (3.5)	★★★ (3)
	Aver-age	Cooling		★★★ (3)	★★★ (3)	★★★ (3)	★★½ (2.5)
		Heating		★★★ (3)	★★½ (2.5)	★★½ (2.5)	★★½ (2.5)
	Cold	Cooling		★★★ (3)	★★★ (3)	★★★ (3)	★★★ (3)
		Heating		★★½ (2.5)	★★½ (2.5)	★★ (2)	★★ (2)
External dimensions (HXWXD)		Indoor	mm	200x750(+120)x500	200x750(+120)x500	200x950(+120)x500	200x950(+120)x500
		Outdoor		540x780(+62)x290	540x780(+62)x290	640x800(+71)x290	640x800(+71)x290
Net weight		Indoor	kg	20.5	20.5	24	24
		Outdoor		34.5	34.5	45	45
Airflow		Cooling (Indoor)	l/s	158-133-108-75	167-142-117-83	225-183-167-125	242-192-175-133
		Heating (Indoor)		167-150-133-100	175-158-142-108	233-208-183-142	250-217-192-150
Installa-tion Data	Refrigerant (Type, Amount, Pre-charge Length)	Quantity	kg	(R32) 0.78	(R32) 0.78	(R32) 1.3	(R32) 1.3
		Pre-Charged to Pipe	m	15	15	15	15
	Refrigerant Piping	Liquid line	mm	Ø6.35	Ø6.35	Ø6.35	Ø6.35
		Gas line		Ø9.52	Ø9.52	Ø12.7	Ø12.7
	Connection Method			Flare connection			
	Maximum Pipe Length (One Way)		m	20		30	
	Max Vertical Height Diff. Between O.U. and I.U.			10 (O.U. above I.U.) / 10 (O.U. below I.U.)		20 (O.U. above I.U.) / 20 (O.U. below I.U.)	
Standard accessories				Polypropylene net x1			
Optional parts				Interface kit (SC-BIKN2-E) / Wi-Fi Kit			
Demand Response (AS4755)				Yes	Yes	Yes	Yes

Item / Operation	Indoor Air Temperature		Outdoor Air Temperature		Standards
	DB	WB	DB	WB	
Cooling	27°C	19°C	35°C	24°C	AS/NZ 3823.2
Heating	20°C	-	7°C	6°C	

(1) The data is measured at the conditions mentioned in the table to the left.
(2) The air-conditioner is manufactured and tested in conformity with the AS/NZS.
(3) Sound level indicates the value in an anechoic chamber. During operation these values are somewhat higher due to ambient conditions.
(4) Select the breaker size according to applicable national standard.
(5) The operation data indicates when the air-conditioner is operated at 240V 50Hz.

*(1) The data is measured at the following conditions:

THE
EXPERTS
IN AIR

mhiaa.com.au ABN 92 133 980 275

Australia: Phone: **1300 138 007**

NSW & Head Office	Block E, 391 Park Road, Regents Park NSW 2143
Victoria	2/15 Howleys Road, Notting Hill VIC 3168
Brisbane	5/26 Flinders Parade, North Lakes QLD 4509
Adelaide	T50 Innovation House, Mawsons Lakes Boulevard, Mawsons Lakes SA 5095
Townsville	1/37 Ross River Road, Mysterton QLD 4812
Western Australia	1/15-17 Capital Road, Malaga WA 6090

Mitsubishi Heavy Industries Air-conditioners Australia, Pty. Ltd.

MOVE THE WORLD FORWARD MITSUBISHI HEAVY INDUSTRIES GROUP

Product specifications, features and images are correct at time of printing and subject to change without notice.