KADO

Kado Lussi Back to Wall Rimless Overheight Pan Only (4 Star)

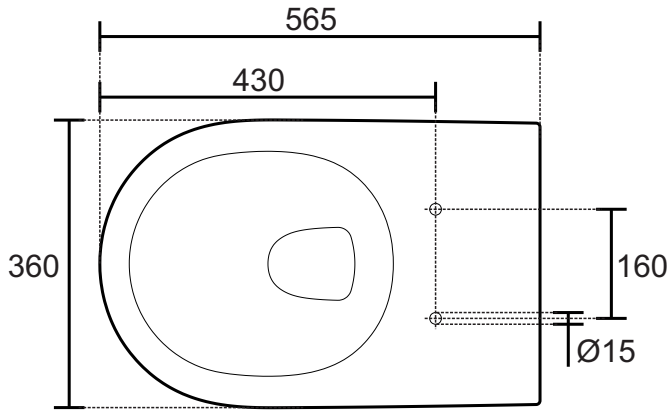

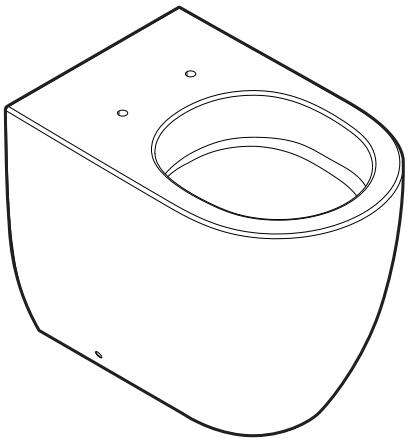

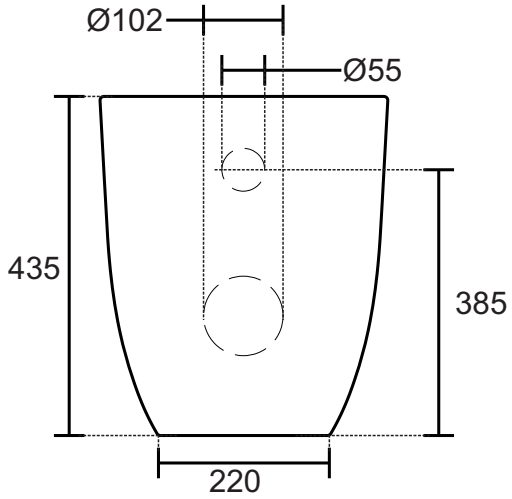

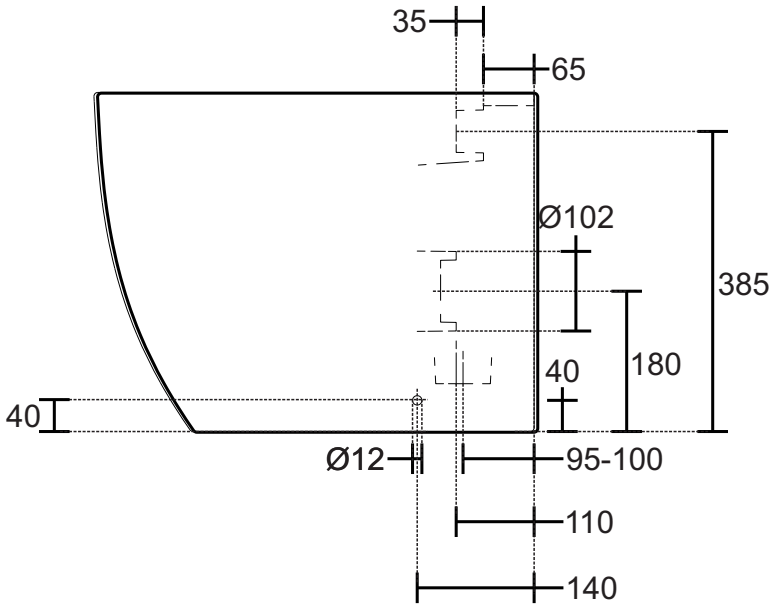

Dimensions are nominal measurements only.

Prior to Installation

Important **Any installation should be carried out by a qualified tradesman in accordance with National Plumbing and Drainage Code AS3500 and in compliance with current National Construction Code Vol 3**

Important **Once inwall cistern has been installed as per manufacture's installation instructions, please implement the following steps to install pan.**

Important **All measurements for roughing in should be taken from the finished wall/floor.**

KADO

Kado Lussi Back to Wall Rimless Overheight Pan Only (4 Star)

Installation

1. Position pan against wall and mark off pan fixing holes for L-shaped brackets on floor.

2. Water inlet pipe should be roughed in at 385mm. Cut inlet pipe so that 95mm protrudes from finished wall and attach seal.

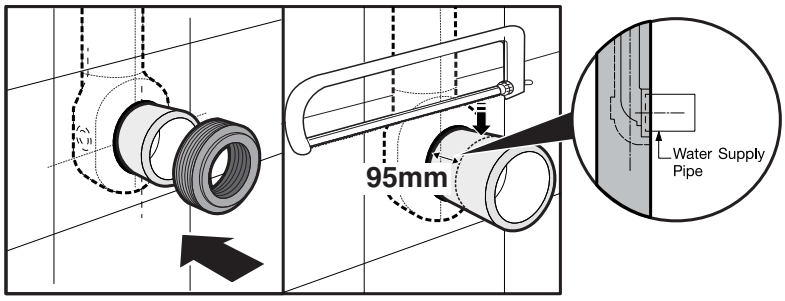

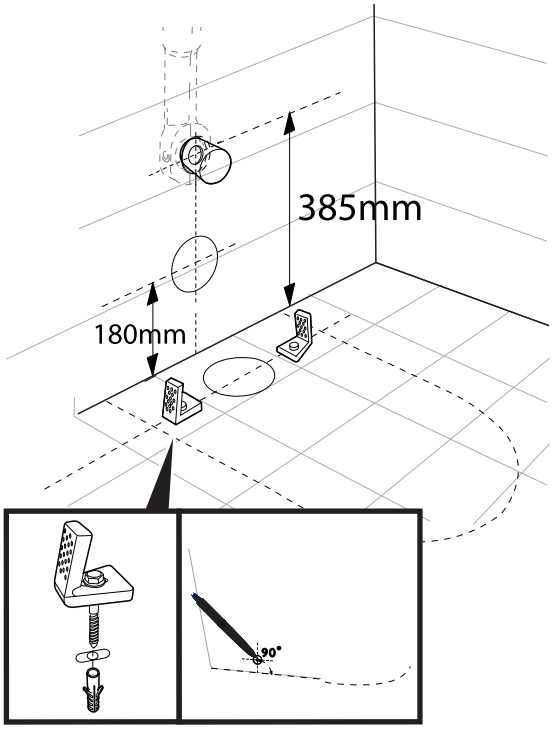

S-Trap Installation

Note: Lubricate Kee seal and outlet seal rubbers.

1. Insert waste pipe into floor at set out of 95-100mm and 180mm above finished floor and fix bracket into position.
Note: Supplied Pan Bend needs to be cut down to suit set out as per specification

2. Push pan into position, ensuring a firm connection is made with inlet and outlet pipes. Avoid disturbing the floor fixing brackets, flush test for leaks.

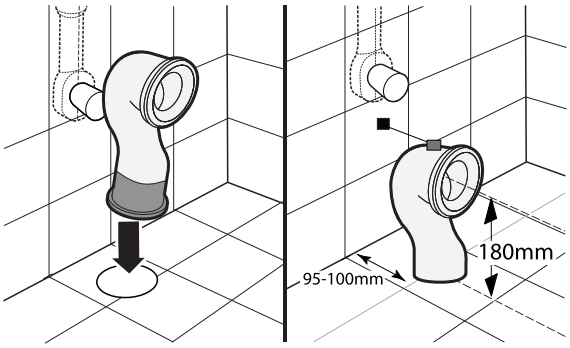

Important

All measurements for roughing in should be taken from the finished wall/floor.

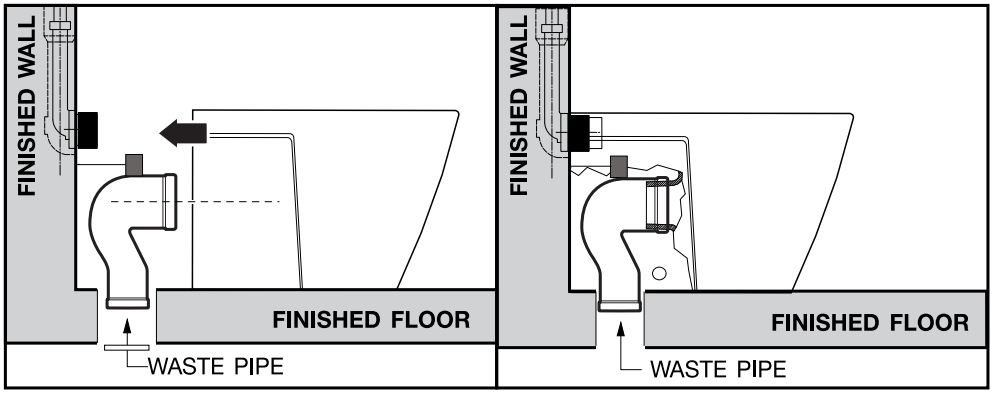

KADO

Kado Lussi Back to Wall Rimless Overheight Pan Only (4 Star)

P-Trap Installation

Note: Lubricate Kee seal and outlet seal rubbers.

1. Push Pan back into position, Ensuring that a firm connection is made with inlet and outlet pipes. Avoid disturbing the floor fixing brackets, flush test for leaks.

Note: 100mm DWV with Pan Collar not supplied.

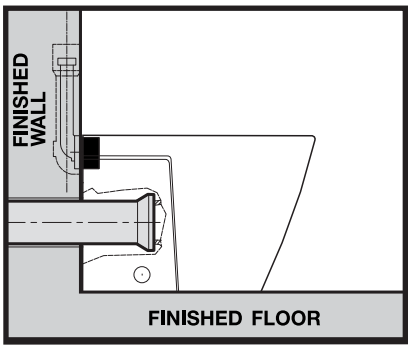

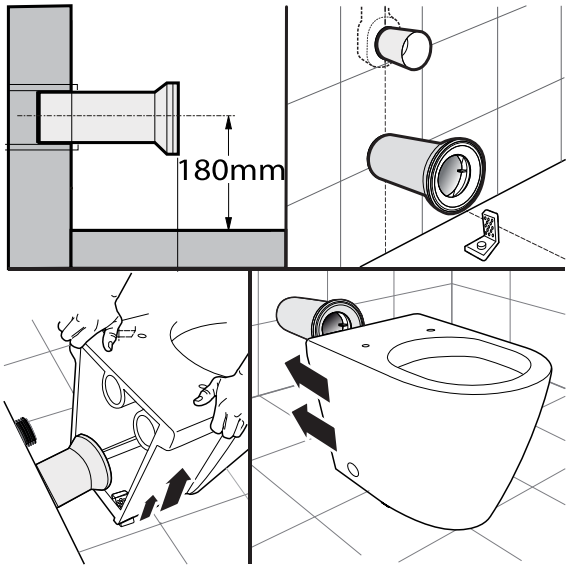

Fixing Pan to Floor

1. Ensure that Pan is level. Fix Pan to floor by bedding with acetic cured silicone sealant and fixing to floor with supplied brackets

2. Fit off seat as per instructions supplied with seat.

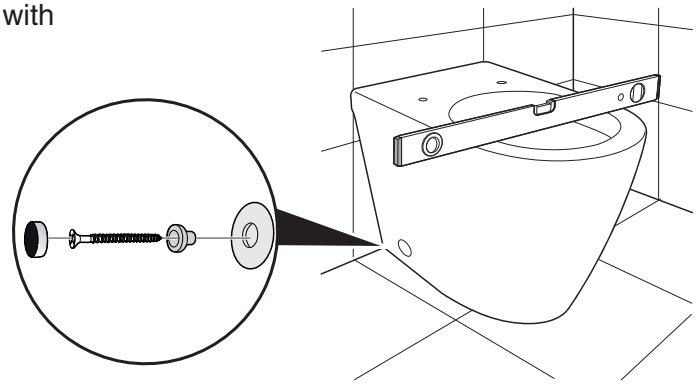

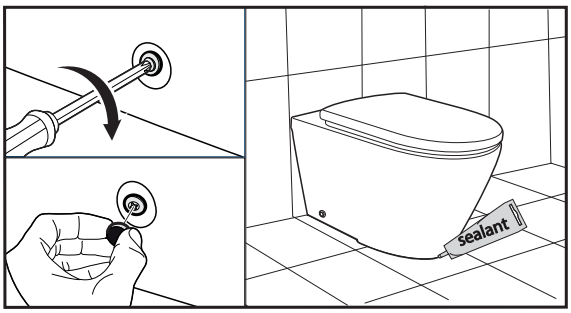

Care Details

We recommend the use of soapy water or approved cleaners. This product should not be cleaned with abrasive materials. Damage caused by any improper treatment is not covered by the product warranty - refer to Warranty Conditions.

Plumbers, please ensure a copy of the installation instruction is left with the end user for future reference.