Specification Sheet

Roca Ona Robe Hook Brushed Gunmetal

35603

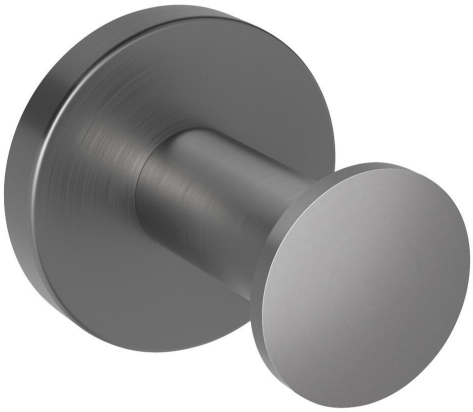

SPECIFICATIONS	
Recommended Use	Residential;Commercial
Colour Finish	Brushed Gunmetal
Primary Material	Brass
WARRANTY	
Residential & Commercial Use (Years)	25
Parts Replacement Only (Years)	1
Please refer to Roca Warranty page for full Terms and Conditions	

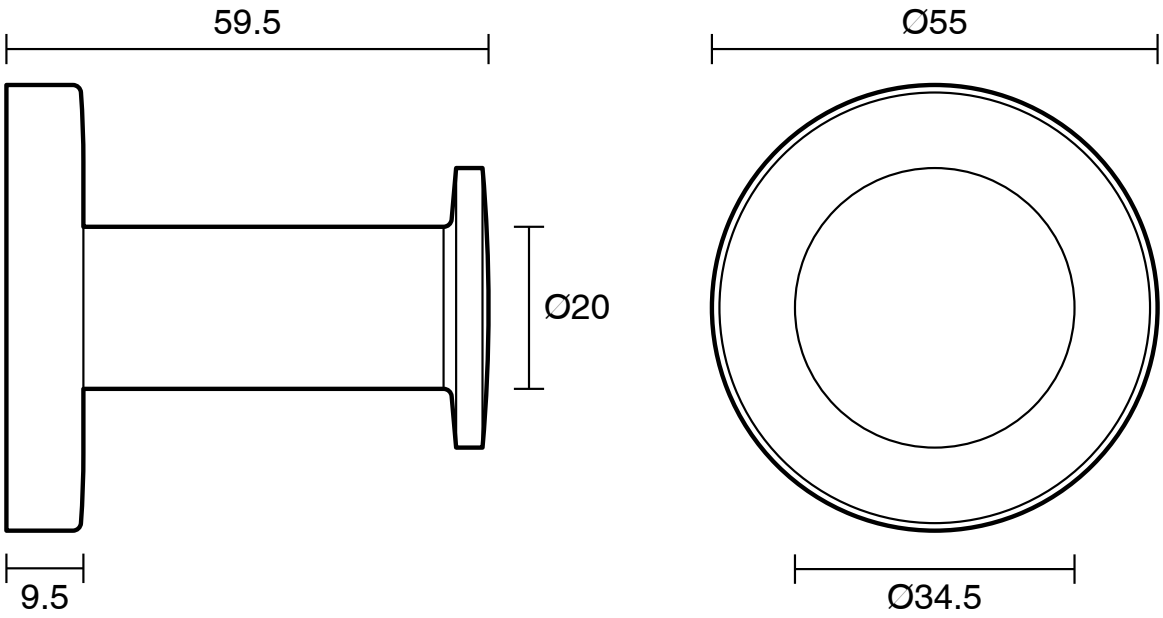

Dimensions are nominal measurements only.

CLEANING RECOMMENDATIONS:

We recommend the use of soapy water or approved cleaners. This product should not be cleaned with abrasive materials. Damage caused by any improper treatment is not covered by the product warranty. Refer to Warranty Conditions

Disclaimer: Products in this specification manual must by regulation be installed by licensed and registered trade people. The manufacturer/distributor reserves the right to vary specifications or delete models from their range without prior notification. Dimensions are nominal measurements only. Dimensions and set-outs listed are correct at time of publication however the manufacturer/distributor takes no responsibility for printing errors.

Published 01/04/2026

To see the complete Roca range go to www.reece.com.au